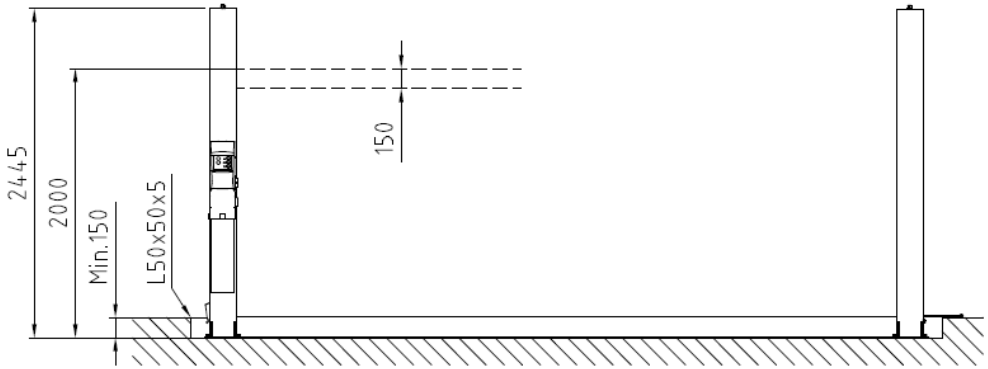

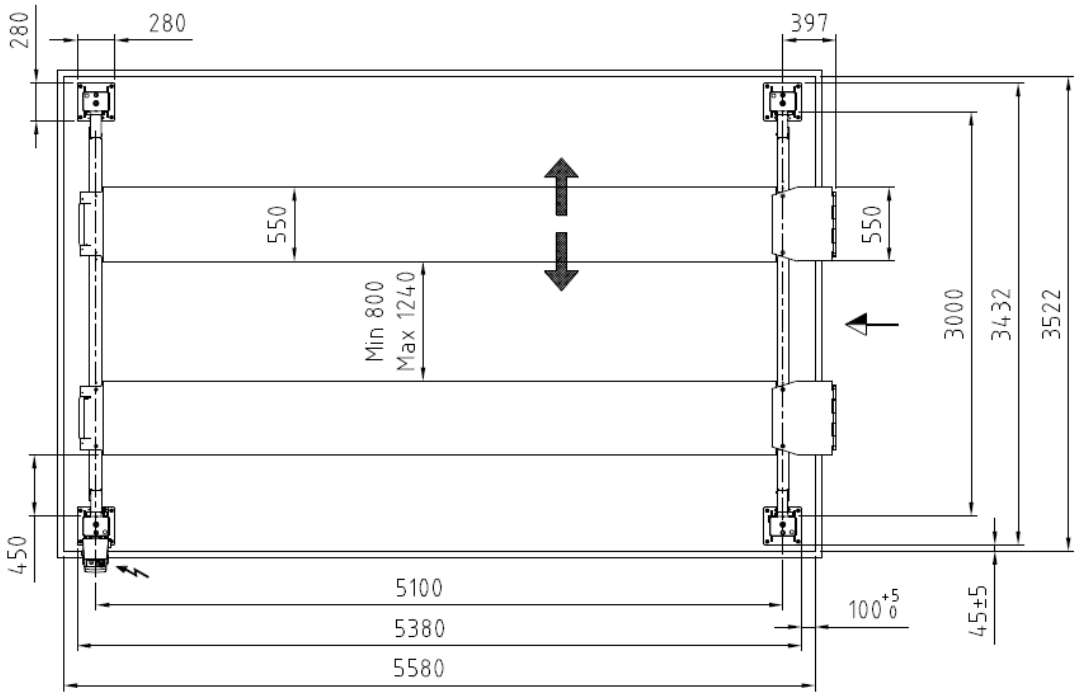

Date: 300522	Sign. lje	Scale: 1:35	No. T12397
ELWICO SERWIS	www.elwico.com.pl biuro@elwico.com.pl		Major 4.40-30-51-S (4000 kg) recessed Rev. date: