UPLIFTING COMPANY

AUTOP STENHOJ

Product catalogue

Mercedes Benz recommended products

Inground lifts I Surface-mounted lifts I Test equipment

More than 100 years of experience in lifting technology

Made in Germany & Made in Denmark

We develop and produce inground lifts in Germany and surface-mounted lifts in Denmark for an intensive and long-term use in your workshop.

The greatest challenge with modern vehicles has been and is still to reach the correct lifting points so that the vehicle can be lifted safely and without damage at its underbody. With our extensive range of lifting adaptors we have a solution for almost every vehicle.

AUTOPSTENHOJ has been setting standards in the sector for many years. Not only our portfolio's wide range but also the quality of manufacturing and the design are unique.

AUTOPSTENHOJ's product quality is also appreciated by leading car manufacturers through approvals and recommendations.

We offer solutions and not only products!
Our premium solution is the distribution of our products through competent partners, ensuring the best possible support for our customers during the product's entire life cycle.

STENHØJ	autop	AUTOP STENHOJ	NEXION
1917	1982	2016	2019
Sigurd Stenhøj founds the company STENHØJ.	Franz Hörnstein and Egon Senger found the company autop.	autop und STENHØJ merge to AUTOPSTENHOJ.	AUTOPSTENHOJ is an integral part of the Nexion Group.

Welcome to AUTOPSTENHOJ.

Our vision:
"AUTOPSTENHOJ offers the best total experience for the premium market of workshop solutions."

AUTOPSTENHOJ – Workshop equipment in premium quality

We offer solutions and not only products!

AUTOPSTENHOJ is manufacturer and supplier of workshop equipment for the global automotive market and stands for innovative processes and top-quality products. **Our goal: We want to be the market leader and for you the first choice for lifting and testing technology, workshop equipment and related services.**

Due to our decades of experience and trustful cooperation with the leading car manufacturers we are able to offer a comprehensive range of approved inground and surface-mounted lifts. Planning, advice and assembly as well as technical support round off our various range of performances.

One strong brand for all markets!

Know-how with Wow-effect: Our AUTOPSTENHOJ Academy.

AUTOPSTENHOJ Academy

Practical experience and training with workshop equipment

As manufacturer of premium products, we not only want to provide our customers with premium workshop equipment, but also make sure that they get the best support before and after the purchase.

In the AUTOPSTENHOJ Academy our customers can convince themselves personally of our products' quality and suitability: **Experience AUTOPSTENHOJ!**

If necessary, we arrange lifting tests with certain vehicle types so that no questions remain open.

Additionally, our sales partners get regularly trained in our Academy, ensuring the highest competence for our customers in the field of AUTOPSTENHOJ technology: on a high training level and every time state-of-the-art.

A spacious show room and two training rooms with a total space of 440 m² are available in the AUTOPSTENHOJ Academy.

AUTOPSTENHOJ seal for sales and service partners

The leading car manufacturers and more and more car dealership chains demand certifications from their suppliers; the European Union makes these recommendations, too. Therefore we decided to implement a seal which makes us together with our partners even more recognizable on the market.

The AUTOPSTENHOJ seal certifies the value of our partners' performances in sales and technology. A regular attendance at intensive trainings in the AUTOPSTENHOJ Academy is obligatory to get this seal. The trainings impart detailed technical knowledge about our our products in the field of lifting and testing technology to our partners.

With this first-hand knowledge, our partners are always up to date and the service quality remains on the highest level.

The Mercedes-Benz branch in Frankfurt.

The Frankfurt branch is one of the largest Mercedes dealerships in the world and has been equipped with AUTOPSTENHOJ products. A total of 46 Masterlift and Biglift inground lifts were installed. More than half were installed in the Multilift frame with maximum piston distance.

When it comes to customer satisfaction...

... we have nothing to say.

We prefer to let the projects speak for themselves, which we have already had the pleasure of carrying out for many well-known customers.
For example, the Mercedes-Benz branch in Wroclaw, Poland, one of the largest Mercedes-Benz branches in Europe with a total area of approx. 10,000 m².
Our Polish AUTOPSTENHOJ partner - Elwico - has taken over the layout, planning and installation of a total of 23 inground lifts: 18 Masterlifts with 3.5 t lifting capacity and 5 Biglifts and Sharklifts with 5 - 6.5 t lifting capacity.

Short-term successes are nice, but the best reference for us is one that lasts for decades. A company for hydraulic lifting systems was founded as early as 1949. However, the decisive upswing in autop's
However, autop's history was given a significant boost by the commitment of Egon Senger in 1965, when he founded the company PERKUTE (PERfekte KUndendienst TEchnik), which later became autop and finally AUTOPSTENHOJ.
So the beginning of this development was a significant milestone for us.

Countless of our lifts can now be found in the 50 companies of the group, which today employs almost 3,000 people.

And what else? Spin a globe and stop it with one finger at any point in any country. We are convinced that there is a very high probability that you will find a lifting solution from AUTOPSTENHOJ in the near distance.
No matter whether it is an Italian sports car factory in Kuwait City or the branch of a German car manufacturer in Beijing, or a small workshop in Bogotá, Colombia. You like it even more precise? You can find facts and figures on many references at www.autopstenhoj.com.

General conditions / specifications for receiving a recommendation:

- CE conformity
- EG type examination/machinery directive
- ISO 9001:2015
- Corrosion protection externally certified acc. to Mercedes Benz requirements
- Worldwide distribution and service
- Tested and approved by the automotive industry
- RAL colour acc. to the requirements of the automotive industry
- Access to all lifting points
- Compliance with max. lifting and lowering speed
- Compliance with minimum height
- Maximum tonnage when arms are extended
- Compliance with max. total width
- Compliance with min. drive-through width
- Compliance with max. sound emission
- Diameter and stability of the lifting pad
- Wide door opening angle to get comfortably in and out of the car
- Minimum lifting height
- Safety devices (signal tone control)
- Complete accessories acc. to Mercedes Benz requirements

TABLE OF CONTENT

Welcome to AUTOPSTENHOJ 2
AUTOPSTENHOJ Academy 4
References 6
General conditions 10

Our inground lifts
Product benefits / arguments 14
Twin-ram lifts ..... Product page I Article overview
- Masterlift 2.35 Pv 160-220 xy ..... 16 I 44
- Masterlift 2.35 Saa 260 ..... 18 I 45
- Masterlift 2.35 Saav 135 VAN ..... 20 I 46
- Masterlift 2.35 Combi Check in KA 1550 ..... 22 I 47
- Biglift 2.50 Saa 265 ..... 24 I 48
- Biglift 2.65 Saaa 265 ..... 26 I 49
- Biglift 2.65 F 550 ..... 28 I 50
- Biglift 4.55 Combi ..... 30 I 51

4-ram lifts ..... Product page I Article overview
- Sharklift 4.65 F 550 ..... 32 I 52

Our surface-mounted lifts
Product benefits / arguments 34
2-post lifts ..... Product page I Article overview
- Maestro 2.35 NxT ..... 36 I 54
- Maestro 2.65 F ..... 38 I 55

Accessories – lifts ..... Product page I Article overview
- Lifting pads ..... 42 I 56
- Jet Cleaner ..... 44 I 57

Our test equipment
Roller brake testers ..... Product page I Article overview
- Testmaster RT40 / RT60 ..... 58 I 62
- Manufacturer Certificate Testmaster RT40 ..... 60 I 65

AUTOPSTENHOJ GmbH
Sandkampstraße 90
48432 Rheine I Germany
+49 5971 8602-02
info@autopstenhoj.com

AUTOPSTENHOJ GmbH
Barrit Langgade 188-190
7150 Barrit I Denmark
+45 76 82 13 30
info@autopstenhoj.com

Our technology in the ground

We offer 5 years' warranty on high pressure seals, cylinder bearings and synchronization devices of our inground lifts*

* The warranty only applies if the annual maintenance has been carried out by trained and certified specialist personnel and has been documented accordingly.

Strong guide bearing

- Construction design in absolute perfection
- Corrosion-free aluminium bearings
- Optimal overall height supports stability
- Permanently attractive appearance

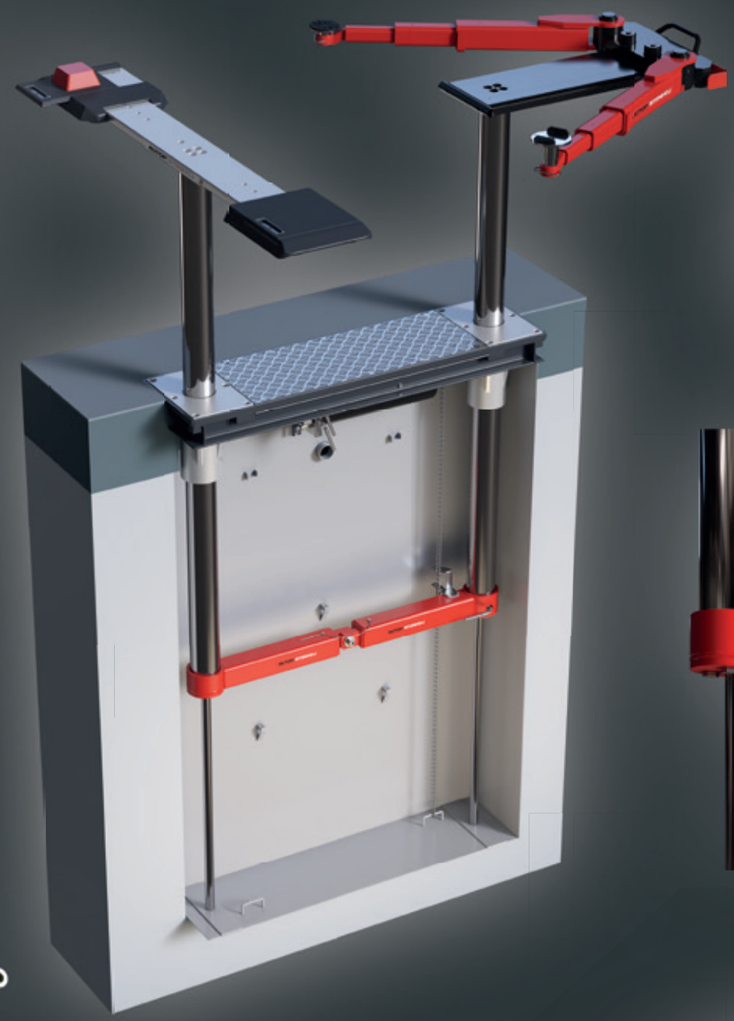

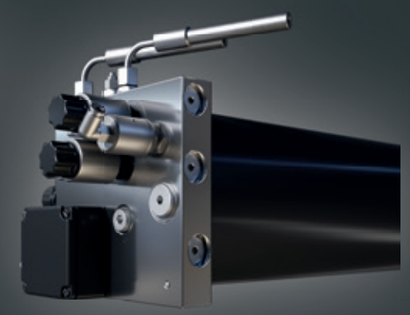

Reliable hydraulic power unit

- Liquid cooled drive motor
- No leakage due to aluminium distributor head
- Constant lifting and lowering times
- Low power consumption
- With pneumatic emergency drain and additional oil filter as standard

Safe lifting cylinder

- Hard chrome plated sliding surface
- Precisely fitting piston guidance via sliding bands
- Inversed cylinder with protected piston seal
- Environmentally friendly hydraulic fluid in extremely small quantities

Optimal connection

- Devided synchronization device with flexible bearing
- Smooth and perfectly synchronized lifting and lowering
- Mechanical safety device in case of one-side pressure loss
- Completely maintenance- and wear-free

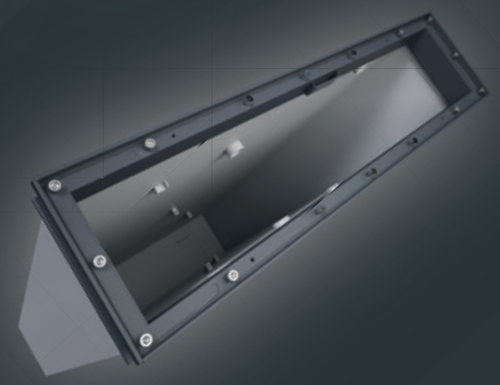

Liquid-tight installation cassettes

- Delivery with tightness certificate
- Wide range of designs for special installation situations

Strong, reliable and durable

Recommended by Mercedes Benz
H13 01 01 1A

Masterlift 2.35 Pv 160-220 xy

Electro-hydraulic twin-ram lift, 3.5 t capacity, superstructure with flat lifting supports

Click the QR-Code
for detailed product information.

Further Information on
www.autopstenhoj.com

AUTOPSTENHOJ GMBH
Sandkampstr. 90
D-48432 Rheine
Tel. +49 5971 860202
Emai: info@autopstenhoj.com

AUTOPSTENHOJ GMBH
Barrit Langgade 188-190
DK-7150 Barrit
Tel. +45 76 82 13 30
Emai: info@autopstenhoj.com

Recommended by Mercedes Benz
H13 01 01 1A

Technical data	
Lifting capacity	3,500 kg
Lifting height	1,950 mm
Working height	2,015 mm + rubber pads
Cylinder diameter	2 x 123 mm
Distance between cylinders	1,335 mm
Lifting / lowering time (high pressure)	approx. 30 sec.
Foundation depth	2,625 mm
Pump unit	3 kW
Hydraulic oil	10 l
Voltage	230 / 400 V – 50 Hz – 16 A

Pv superstructure	
Total width min. – max.	160 – 220: approx. 1,600 – 2,200 mm
Min. height	65 mm

Application

- ☐ Check-in
- ☐ Repairs and maintenance
- ☐ Testing

Description:

Steel cassette:
- ☐ Waterproof steel cassette

Hydraulic unit:
- ☐ Hard-chrome plated cylinder
- ☐ Flexible synchronization and safety system
- ☐ Corrosion-free guiding elements
- ☐ Pump unit with immersed motor
- ☐ Hydraulic oil
- ☐ Pneumatic emergency lowering
- ☐ Programmable pushbutton control unit

Superstructure:
- ☐ Stable lifting supports, lengthwise adjustable
- ☐ Rubber-coated, non-skid pads
- ☐ Low minimum height

Colour according to approval:
- ☐ Pv Premium: zinc coated and painted RAL 7015 – slate grey

Versions:

Steel cassette:
- ☐ Zinc-coated
- ☐ Coated
- ☐ Self-carrying

Superstructure:
- ☐ Pv Premium: zinc coated and painted

Installation:
- ☐ Superstructure on floor
- ☐ Superstructure in floor
- ☐ Ceiling installation

Optional extras:

- ☐ XY-pads
- ☐ Sets of rubber blocks, 40, 60, 80 and 100 mm
- ☐ Traverse

The product meets the requirements for workshop equipment for MB service workshops and is recommended by Mercedes Benz with approval no. H13 01 01 1A.

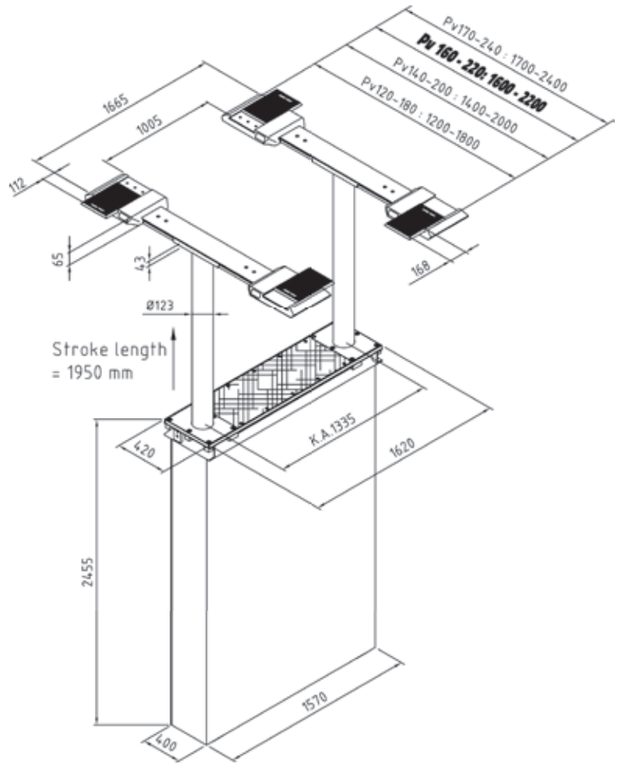

XY-pads with rubber

Various pads

Solid lifting supports,
zinc coated and painted

Illustrations are not binding and optional. Under reserve of dimensional, constructional and technical modifications! Validity 02/2023.

Recommended by Mercedes Benz
H11 01 16 1A

Masterlift 2.35 Saa 260

Electro-hydraulic twin-ram lift, 3.5 t capacity, superstructure with arms

Einfach QR-Code lesen für detailed product information.

Further information unter www.autopstenhoj.com

AUTOPSTENHOJ GMBH
Sandkampstr. 90
D-48432 Rheine
Tel. +49 5971 860202
Emai: info@autopstenhoj.com

AUTOPSTENHOJ GMBH
Barrit Langgade 188-190
DK-7150 Barrit
Tel. +45 76 82 13 30
Emai: info@autopstenhoj.com

Recommended by Mercedes Benz
H11 01 16 1A

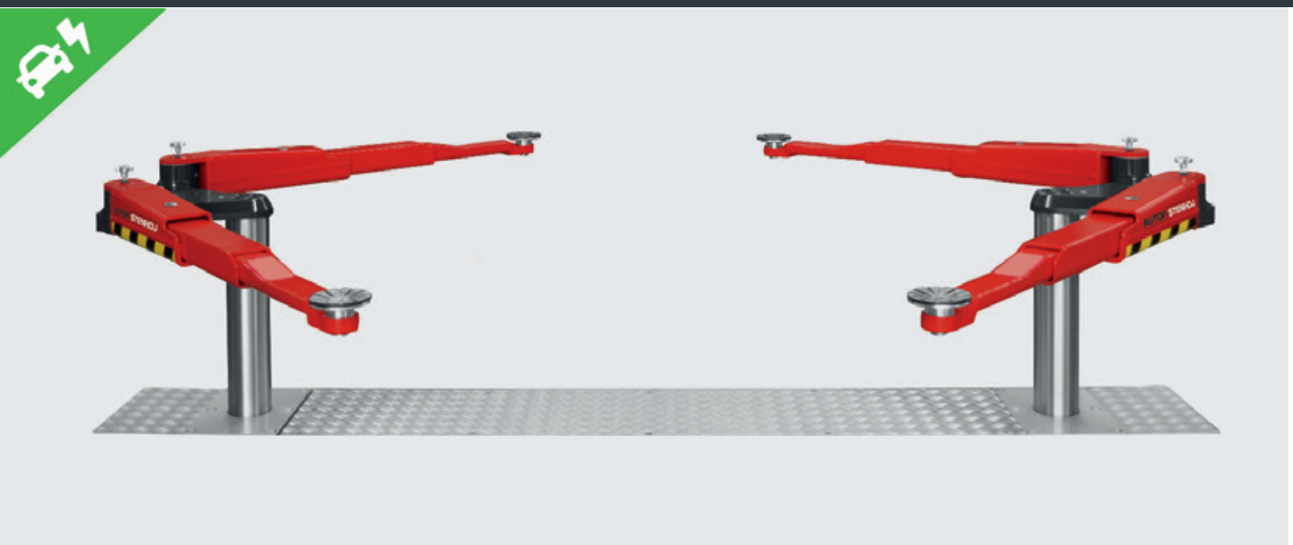

Technical data	
Lifting capacity	3,500 kg
Lifting height	1,900 mm
Working height	1,970 - 2,035 mm
Cylinder diameter	2 x 140 mm
Distance between cylinders	2,600 mm
Lifting / lowering time (high pressure)	approx. 30 sec.
Foundation depth	2,625 mm
Pump unit	3 kW
Hydraulic oil	10 l
Voltage	230 / 400 V – 50 Hz – 16 A

Arm superstructure	
Total width	3,000 mm
Lifting pad included in the delivery	Uni: 11027 (95 – 135 mm)
Min. height	95 – 135 mm
Drive-through width	Saa 260: 2,455 mm
Arm length, min. - max.	658 – 1,313 mm

Application

- ☐ Repairs and maintenance
- ☐ Body work

Description:

Steel cassette:
- ☐ Waterproof steel cassette

Hydraulic unit:
- ☐ Hard-chrome plated cylinder
- ☐ Flexible synchronization and safety system
- ☐ Corrosion-free guiding elements
- ☐ Pump unit with immersed motor
- ☐ Hydraulic oil
- ☐ Pneumatic emergency lowering
- ☐ Programmable pushbutton control unit

Superstructure:
- ☐ Double-telescopic arms
- ☐ Internal arm locking system
- ☐ Low minimum height - perfect for sports cars - with a minimum height under 100 mm

Colour according to approval:
- ☐ RAL 7015 - slate grey

Versions:

Steel cassette:
- ☐ Zinc-coated
- ☐ Coated
- ☐ Self-carrying

Installation:
- ☐ Superstructure on floor
- ☐ Superstructure in floor
- ☐ Ceiling installation

Optional extras:

- ☐ Large program of extra pads

The product meets the requirements for workshop equipment for MB service workshops and is recommended by Mercedes Benz with approval no. H11 01 16 1A.

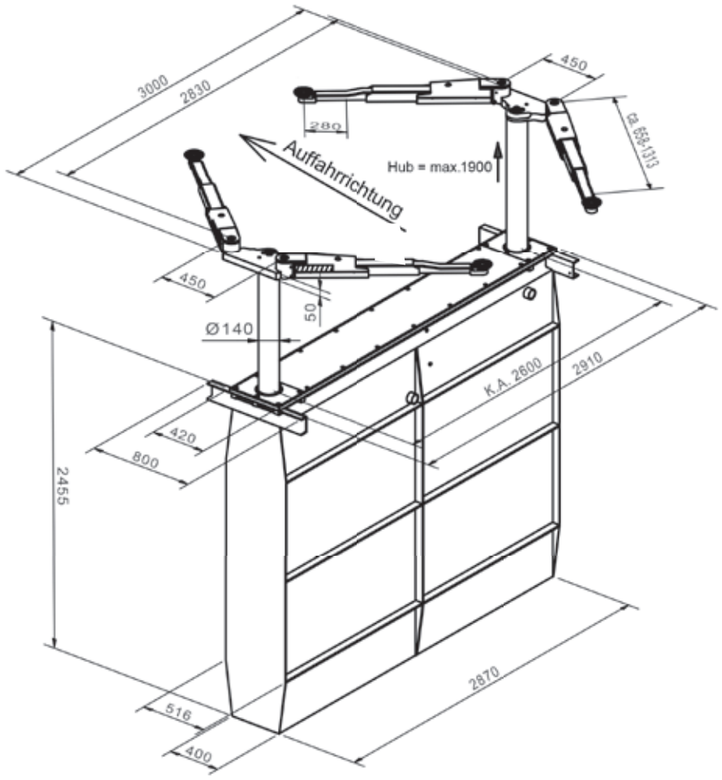

Very low arm construction

Pad and pad extensions

Internal arm locking system

Illustrations are not binding and optional. Under reserve of dimensional, constructional and technical modifications! Validity 02/2023.

Recommended by Mercedes Benz
H11 01 01 1A

Masterlift 2.35 Saav 135 VAN

Electro-hydraulic twin-ram lift, 3.5 t capacity, superstructure with adjustable arms

Application
☐ Repairs and maintenance

Description:

Steel cassette:
- ☐ Waterproof steel cassette

Hydraulic unit:
- ☐ Hard-chrome plated cylinder
- ☐ Flexible synchronization and safety system
- ☐ Corrosion-free guiding elements
- ☐ Pump unit with immersed motor
- ☐ Hydraulic oil
- ☐ Pneumatic emergency lowering
- ☐ Programmable pushbutton control unit

Superstructure:
- ☐ Double-telescopic arms
- ☐ Internal arm locking system
- ☐ Low minimum height
- ☐ Suitable for wheel supports

Colour according to approval:
- ☐ RAL 7015 - slate grey

Versions:

Steel cassette:
- ☐ Zinc-coated
- ☐ Coated
- ☐ Self-carrying

Installation:
- ☐ Superstructure on floor
- ☐ Ceiling installation

Versions:
- ☐ Sport & Universal versions

Optional extras:

- ☐ Large program of extra pads

The product meets the requirements for workshop equipment for MB service workshops and is recommended by Mercedes Benz with approval no. H11 01 01 1A.

UPLIFTING COMPANY
AUTOP STENHOJ

Click the QR-Code
for detailed product information.

Further Information on
www.autopstenhoj.com

AUTOPSTENHOJ GMBH
Sandkampstr. 90
D-48432 Rheine
Tel. +49 5971 860202
Emai: info@autopstenhoj.com

AUTOPSTENHOJ GMBH
Barrit Langgade 188-190
DK-7150 Barrit
Tel. +45 76 82 13 30
Emai: info@autopstenhoj.com

Recommended by Mercedes Benz
H11 01 01 1A

Technical data	
Lifting capacity	3,500 kg
Lifting height	1,950 mm
Working height	2,020 – 2,085 mm
Cylinder diameter	2 x 123 mm
Distance between cylinders	1,335 mm
Lifting / lowering time (high pressure)	approx. 30 sec.
Foundation depth	2,625 mm
Pump unit	3 kW
Hydraulic oil	10 l
Voltage	230 / 400 V – 50 Hz – 16 A

Arm superstructure	
Total width	3,210 mm
Lifting pad included in the delivery	Uni: 11027 (95 – 135 mm) Sport: 29265 (70 – 95 mm)
Min. height	Uni: 95 – 135 mm Sport: 70 – 95 mm
Arm length, min. - max.	710 – 1,443 mm

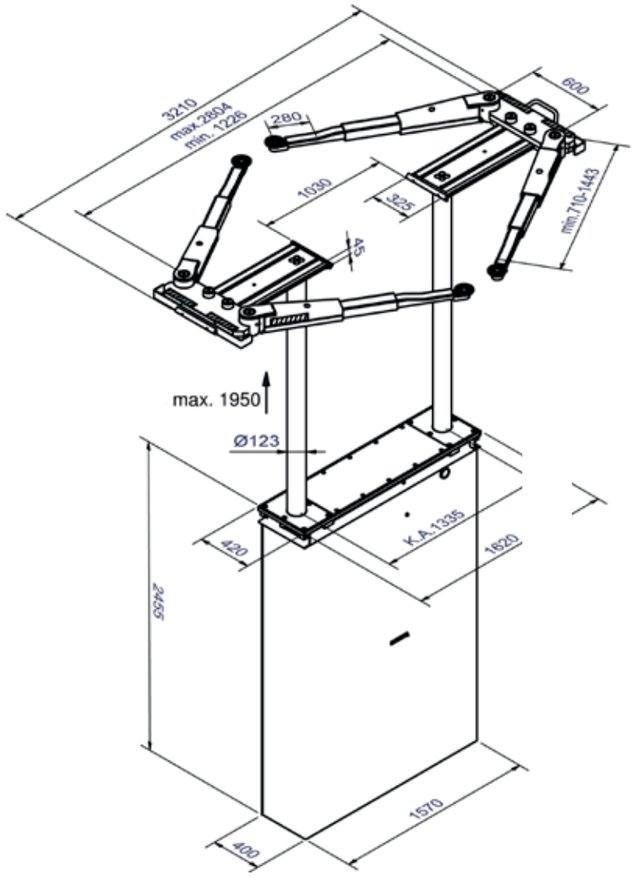

Slidable superstructure

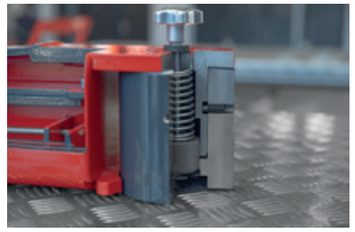

Illustrations are not binding and optional. Under reserve of dimensional, constructional and technical modifications! Validity 02/2023.

Recommended by Mercedes Benz
H12 01 04 1L

Masterlift 2.35 Combi Check-in – KA 1550

Electro-hydraulic 2x twin-ram lift, 3.5 t, platforms and free-wheel lift with flat lifting supports

Click the QR-Code
for detailed product information.

Further Information on
www.autopstenhoj.com

AUTOPSTENHOJ GMBH
Sandkampstr. 90
D-48432 Rheine
Tel. +49 5971 860202
Emai: info@autopstenhoj.com

AUTOPSTENHOJ GMBH
Barrit Langgade 188-190
DK-7150 Barrit
Tel. +45 76 82 13 30
Emai: info@autopstenhoj.com

Recommended by Mercedes Benz
H12 01 04 1L

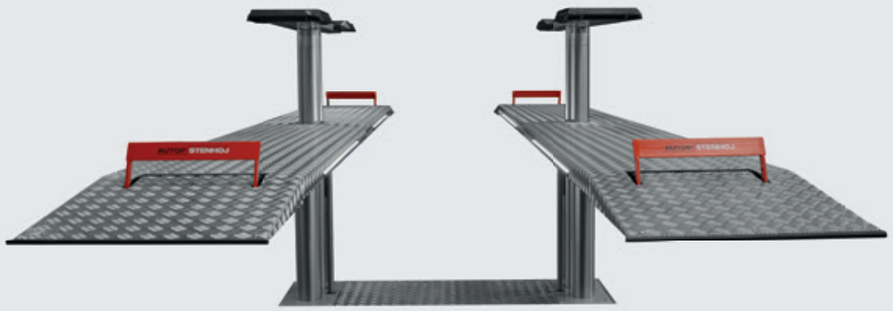

Technical data	
Lifting capacity	3,500 kg
Lifting height	1,870 mm
Working height	F: 1,965 mm RFH: 2,030 mm + Rubber pads
Cylinder diameter	4 x 140 mm
Distance between cylinders	1,550 mm
Lifting / lowering time (high pressure)	approx. 30 sec.
Foundation depth	2,625 mm
Pump unit	3 kW
Hydraulic oil	14 l
Voltage	230 / 400 V – 50 Hz – 16 A

Platforms	
Total length	5,580 mm
Usable legth of platform	4,400 mm
Wheel base	approx. 3,900 mm
Platform width	650 mm
Distance between platforms	900 mm
Drive-on height	95 mm

Pv superstructure	
Total length min. – max.	160 – 220: approx. 1,600 – 2,200 mm
Min. height	65 mm

The product meets the requirements for workshop equipment for MB service workshops and is recommended by Mercedes Benz with approval no. H12 01 04 1L.

Application
☐ Check-in
☐ Testing

Description:

Steel cassette:
- ☐ Waterproof steel cassette

Hydraulic unit:
- ☐ Hard-chrome plated cylinder
- ☐ Flexible synchronization and safety system
- ☐ Corrosion-free guiding elements
- ☐ Pump unit with immersed motor
- ☐ Hydraulic oil
- ☐ Pneumatic emergency lowering
- ☐ Programmable pushbutton control unit

Superstructure:
- ☐ A set of platforms with drive-on ramps and stops
- ☐ Low drive-on angle (< 8°), perfect for sports cars

Free-wheel device Pv:
- ☐ Stable lifting supports, lengthwise adjustable
- ☐ Rubber-coated, non-skid pads
- ☐ Low minimum height

Colour according to approval:
- ☐ Platforms: RAL 7015 - slate grey and aluminium coated with integrated LED lightning
- ☐ Pv Premium: RAL 7015 - slate grey

Versions:

Steel cassette:
- ☐ Zinc-coated
- ☐ Coated

Installation:
- ☐ Superstructure on floor
- ☐ Superstructure in floor

Optional extras:

- ☐ XY-pads
- ☐ Sets of rubber blocks, 40, 60, 80 and 100 mm
- ☐ Large program of extra pads

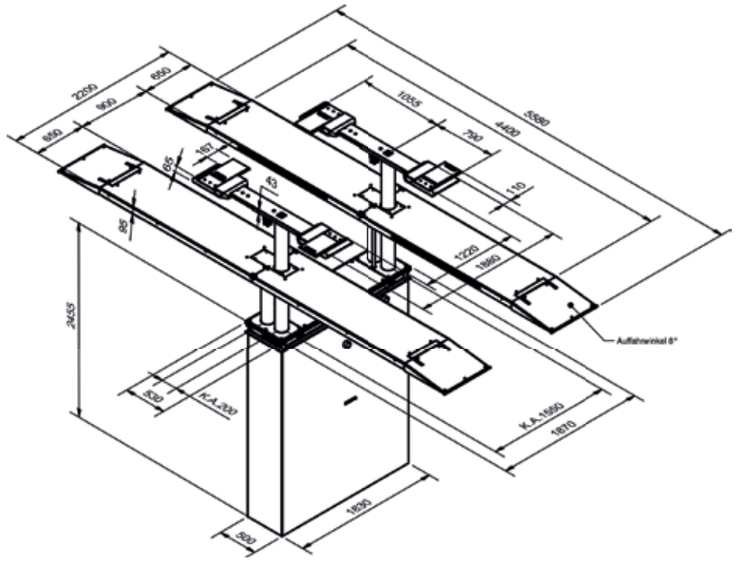

XY-heads with rubber

Lift in reception area

Integrated stops

Illustrations are not binding and optional. Under reserve of dimensional, constructional and technical modifications! Validity 02/2023.

Recommended by Mercedes Benz
H21 01 04 1B

Biglift 2.50 Saa 265

Electro-hydraulic twin-ram lift, 5 t with superstructure with arms

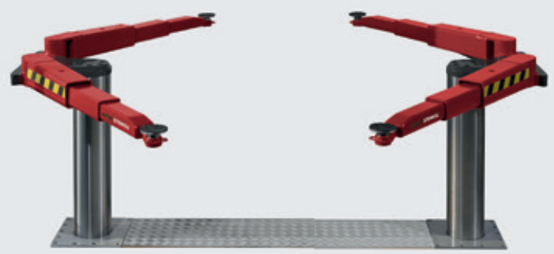

Application

- Repair and maintenance
- Body work

Description:

Steel cassette:
- Waterproof steel cassette

Hubeinheit:
- Hard-chrome plated cylinder
- Flexible synchronization and safety system
- Corrosion-free guiding elements
- Pump unit with immersed motor
- Hydraulic oil
- Pneumatic emergency lowering
- Programmable pushbutton control unit
- Great stability, even with uneven weight distribution due to the cylinder diameter of 213 mm

Superstructure:
- Double telescopic arms
- Internal arm locking system
- Low minimum height
- Mechanical ratchet system integrated in the hydraulic unit
- Air preparation unit for oiled and regulated compressed air (min . 6 bar / max . 10 bar)

Colour according to approval:
- RAL 7015 slate grey

Versions:

Steel cassette:
- Zinc-coated
- Coated
- Self-carrying

Installation:
- Superstructure on floor
- Superstructure in floor with covers
- Ceiling installation

Optional extras:

- Large program of extra pads

UPLIFTING COMPANY
AUTOP STENHOJ

Click the QR-Code
for detailed product information.

Further Information on
www.autopstenhoj.com

AUTOPSTENHOJ GMBH
Sandkampstr. 90
D-48432 Rheine
Tel. +49 5971 860202
Emai: info@autopstenhoj.com

AUTOPSTENHOJ GMBH
Barrit Langgade 188-190
DK-7150 Barrit
Tel. +45 76 82 13 30
Emai: info@autopstenhoj.com

Recommended by Mercedes Benz
H21 01 04 1B

Technical data	
Lifting capacity	5,000 kg
Lifting height	1,865 mm
Working height	2,000 – 2,060 mm
Cylinder diameter	2 x 213 mm
Distance between cylinders	2,650 mm
Lifting / lowering time	approx. 45 sec.
Foundation depth	2,625 mm
Pump unit	3 kW
Hydraulic oil	17 l
Voltage	230 / 400 V – 50 Hz – 16 A

Arm superstructure	
Total width	2.950 mm
Lifting pad included in the delivery	11028 (135 – 195 mm)
Min. height	135 – 195 mm
Drive-through width	2.430 mm
Arm length, min. - max.	715 – 1.410 mm

The product meets the requirements for workshop equipment for MB service workshops and is recommended by Mercedes Benz with approval no. H21 01 04 1B.

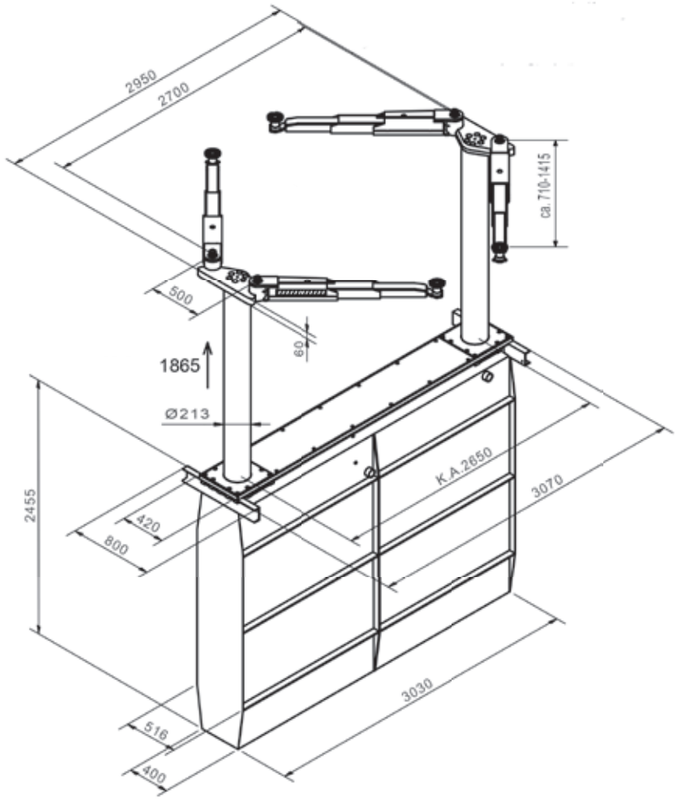

Superstructure on floor

Superstructure with lifting pads and wheel adaptors

Internal arm locking system

Illustrations are not binding and optional. Under reserve of dimensional, constructional and technical modifications! Validity 02/2023.

Recommended by Mercedes Benz
H21 01 04 1A

Biglift 2.65 Saaa 265

Electro-hydraulic twin-ram lift, 6.5 t capacity, superstructure with arms

Click the QR-Code
for detailed product information.

Further Information on
www.autopstenhoj.com

AUTOPSTENHOJ GMBH
Sandkampstr. 90
D-48432 Rheine
Tel. +49 5971 860202
Emai: info@autopstenhoj.com

AUTOPSTENHOJ GMBH
Barrit Langgade 188-190
DK-7150 Barrit
Tel. +45 76 82 13 30
Emai: info@autopstenhoj.com

Recommended by Mercedes Benz
H21 01 04 1A

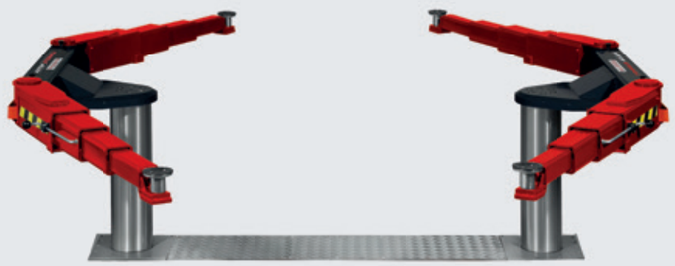

Technical data	
Lifting capacity	6,500 kg
Lifting height	1,865 mm
Working height	2,000 - 2,060 mm
Cylinder diameter	2 x 213 mm
Distance between cylinders	2,650 mm
Lifting / lowering time (high pressure)	approx. 45 sec.
Foundation depth	2,625 mm
Pump unit	3 kW
Hydraulic oil	18 l
Voltage	230 / 400 V – 50 Hz – 16 A

Arm superstructure	
Total width	3,350 mm
Lifting pad included in the delivery	11028 (135 – 195 mm)
Min. height	135 – 195 mm
Drive-through width	2,430 mm
Arm length, min. - max.	770 – 1,640 mm

The product meets the requirements for workshop equipment for MB service workshops and is recommended by Mercedes Benz with approval no. H21 01 04 1A.

Application
☐ Repairs and maintenance
☐ Body work

Description:

Steel cassette:
- ☐ Waterproof steel cassette

Hydraulic unit:
- ☐ Hard-chrome plated cylinder
- ☐ Flexible synchronization and safety system
- ☐ Corrosion-free guiding elements
- ☐ Pump unit with immersed motor
- ☐ Hydraulic oil
- ☐ Pneumatic emergency lowering
- ☐ Programmable pushbutton control unit
- ☐ Great stability, even with uneven weight distribution; due to the cylinder diameter of 213 mm

Superstructure:
- ☐ Triple telescopic arms
- ☐ Wheel bearing of the first extension arm
- ☐ Low minimum height
- ☐ Mechanical ratchet system integrated in the hydraulic unit
- ☐ Air preparation unit for oiled and regulated compressed air (min . 6 bar / max . 10 bar)

Colour according to approval:
- ☐ RAL 7015 - slate grey

Versions:

Steel cassette:
- ☐ Zinc-coated
- ☐ Coated
- ☐ Self-carrying (Saaa 230)

Installation:
- ☐ Superstructure on floor
- ☐ Superstructure in floor with covers
- ☐ Ceiling installation

Optional extras:

- ☐ Large program of extra pads

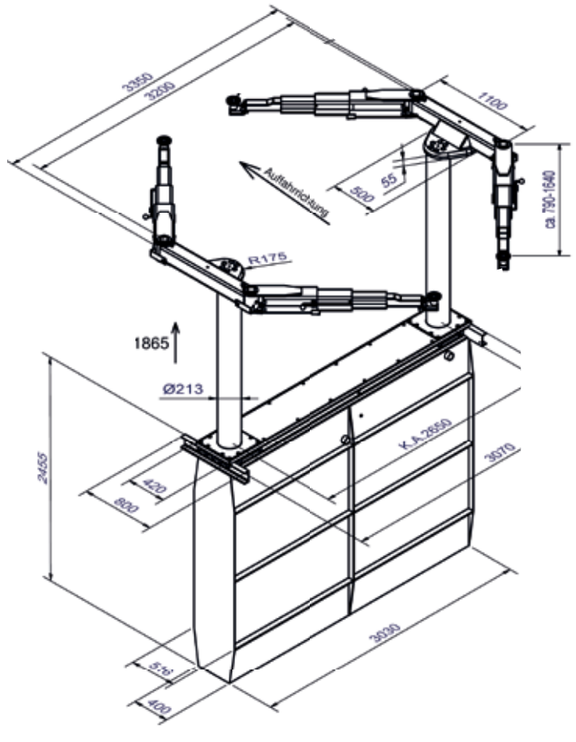

Triple telescopic arms with roller bearings

Various optional extras

Arm locking system

Illustrations are not binding and optional. Under reserve of dimensional, constructional and technical modifications! Validity 02/2023.

Recommended by Mercedes Benz
H23 13 10 7A

Biglift 2.65 F 550

Electro-hydraulic twin-ram lift, 6.5 t capacity, platforms

Click the QR-Code
for detailed product information.

Further Information on
www.autopstenhoj.com

AUTOPSTENHOJ GMBH
Sandkampstr. 90
D-48432 Rheine
Tel. +49 5971 860202
Emai: info@autopstenhoj.com

AUTOPSTENHOJ GMBH
Barrit Langgade 188-190
DK-7150 Barrit
Tel. +45 76 82 13 30
Emai: info@autopstenhoj.com

Recommended by Mercedes Benz
H23 13 10 7A

Technical data	
Lifting capacity	6,500 kg
Lifting height	1,860 mm
Working height	2,040 mm
Cylinder diameter	2 x 213 mm
Distance between cylinders	1,550 mm
Lifting / lowering time (high pressure)	approx. 45 sec.
Foundation depth	2,665 mm
Pump unit	3 kW
Hydraulic oil	17 l
Voltage	230 / 400 V – 50 Hz – 16 A

Platforms	
Total length	approx. 6,800 mm
Usable legth of platform	5,500 mm
Wheel base	approx. 5,000 mm
Platform width	650 mm
Distance between platforms	900 mm
Drive-on height	180 mm

Scissor jack (Option)	
Lifting capacity	4,000 Kg
Lifting height	330 mm
Operation	air-hydraulic
Lift positions	middle / 880 – 1,734 mm

Application
☐ Check-in
☐ Repairs and maintenance
☐ Testing

Description:

Steel cassette:
- ☐ Waterproof steel cassette

Hydraulic unit:
- ☐ Hard-chrome plated cylinder
- ☐ Flexible synchronization and safety system
- ☐ Corrosion-free guiding elements
- ☐ Pump unit with immersed motor
- ☐ Hydraulic oil
- ☐ Pneumatic emergency lowering
- ☐ Programmable pushbutton control unit
- ☐ Great stability, even with uneven weight distribution; due to the cylinder diameter of 213 mm

Superstructure:
- ☐ A set of platforms with drive-on ramps and stops

Colour according to approval:
- ☐ RAL 7015 - slate grey

Versions:

Steel cassette:
- ☐ Zinc-coated
- ☐ Coated

Installation:
- ☐ Superstructure on floor
- ☐ Superstructure in floor

Optional extras:

- ☐ LED-lighting set
- ☐ Scissor jack

The product meets the requirements for workshop equipment for MB service workshops and is recommended by Mercedes Benz with approval no. H23 13 10 7A.

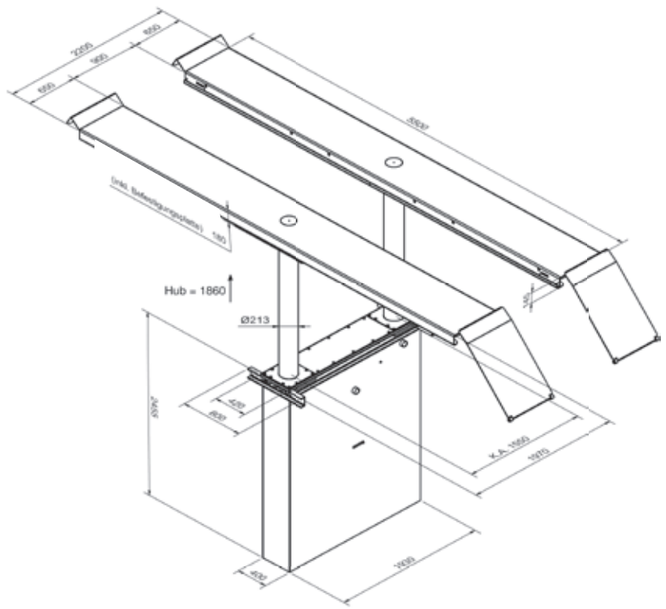

Scissor jack

Non-skid surface

LED lighting set

Illustrations are not binding and optional. Under reserve of dimensional, constructional and technical modifications! Validity 02/2023.

Recommended by Mercedes Benz
H22 13 10 7A

Biglift 4.55 Combi

Electro-hydraulic 2x twin-ram lift, 5.5 t capacity, platforms and free-wheel lift with arms

Click the QR-Code
for detailed product information.

Further Information on
www.autopstenhoj.com

AUTOPSTENHOJ GMBH
Sandkampstr. 90
D-48432 Rheine
Tel. +49 5971 860202
Emai: info@autopstenhoj.com

AUTOPSTENHOJ GMBH
Barrit Langgade 188-190
DK-7150 Barrit
Tel. +45 76 82 13 30
Emai: info@autopstenhoj.com

Recommended by Mercedes Benz
H22 13 10 7A

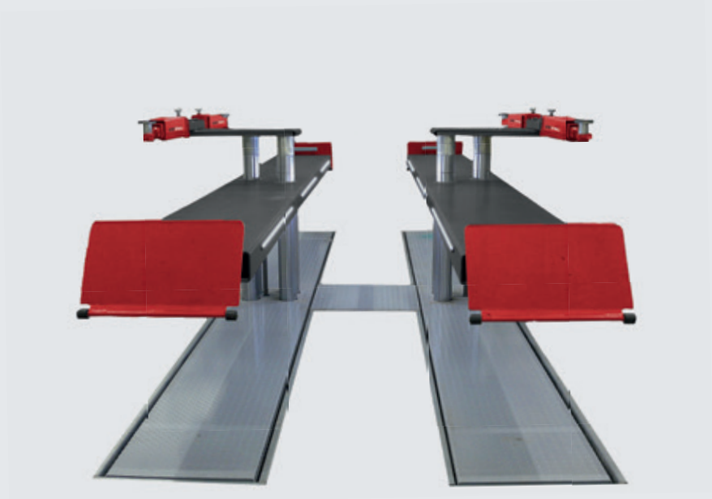

Technical data	
Lifting capacity	5,500 kg
Lifting height	1,895 mm
Working height	F: 2,060 mm RFH 2,195 - 2,255 mm
Cylinder diameter	8 x 140 mm
Distance between cylinders	1,240 – 1,850 mm
Lifting / lowering time (high pressure)	approx. 38 sec.
Foundation depth	2,640 mm
Pump unit	3 kW
Hydraulic oil	20 l
Voltage	230 / 400 V – 50 Hz – 16 A

Arm superstructure	
Total width	3,134 mm
Lifting pad included in the delivery	11028 (135 – 195 mm)
Min. height	165 – 220 mm
Arm length, min. - max.	725 – 1,410 mm

Platforms	
Total length	approx. 6,800 mm
Usable legth of platform	5,500 mm
Wheel base	approx. 5,000 mm
Platform width	650 mm
Distance between platforms	900 mm
Drive-on height	165 mm

The product meets the requirements for workshop equipment for MB service workshops and is recommended by Mercedes Benz with approval no. H22 13 10 7A.

Application
☐ Check-in
☐ Repairs and maintenance
☐ Testing

Description:

Steel cassette:
- ☐ Waterproof steel cassette

Hydraulic unit:
- ☐ Hard-chrome plated cylinder
- ☐ Flexible synchronization and safety system
- ☐ Corrosion-free guiding elements
- ☐ Pump unit with immersed motor
- ☐ Hydraulic oil
- ☐ Pneumatic emergency lowering
- ☐ Programmable pushbutton control unit great stability, even with uneven weight distribution (all 4 cylinders in operation)

Superstructure:
- ☐ A set of platforms with drive-on ramps and stops

Free-wheel device Saav:
- ☐ Double telescopic arms, crosswise adjustable
- ☐ Internal arm locking system
- ☐ Low minimum height

Colour according to approval:
- ☐ RAL 7015 - slate grey

Versions:

Steel cassette:
- ☐ Zinc-coated
- ☐ Coated

Installation:
- ☐ Superstructure on floor
- ☐ Superstructure in floor with or without flush floor device

Optional extras:

- ☐ LED-lighting set
- ☐ Large program of extra pads

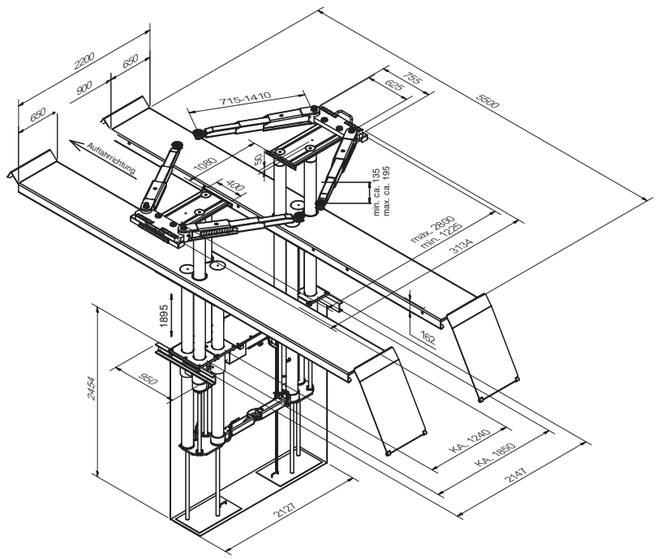

Sturdy lift with Saav free-wheel lift

LED lighting set

Slidable superstructure

Illustrations are not binding and optional. Under reserve of dimensional, constructional and technical modifications! Validity 02/2023.

Recommended by Mercedes Benz
H41 01 08 1P

Sharklift 4.65 F 550

Electro-hydraulic 4-ram lift, 6.5 t capacity, platforms

Application

- Check-in
- Repairs and maintenance
- Wheel alignment
- Testing

Description:

Steel cassette:
- Waterproof steel cassette

Hydraulic unit:
- 2 separate hydraulic units with hard-chrome plated cylinders
- Electronic synchronization between the hydraulic units and pre-programmed top stop
- Flexible synchronization and safety system
- Corrosion-free guiding elements
- Pump unit with immersed motor
- Hydraulic oil
- Pneumatic emergency lowering
- Programmable pushbutton control unit
- Air preparation unit for oiled and regulated compressed air (min . 6 bar / max . 10 bar)

Superstructure:
- A set of platforms with drive-on ramps and stops Platforms with tolerances of only max ± 0,5 mm length- and crosswise
- With two recesses front and rear, as well as distance pieces covering the entire length and fixated by steel edges in sides
- Preparation for innovative air supply for jacking beam

Colour according to approval:
- RAL 7015 - slate grey

Versions:

Steel cassette:
- Zinc-coated
- Coated

Installation:
- Superstructure on floor
- Superstructure in floor with or without flush-floor device

Contact us with regard to the possibilities of combining with other wheel alignment equipment!

Optional extras:

- LED-lighting set
- Precision slip plates
- Scissor jack

UPLIFTING COMPANY
AUTOP STENHOJ

Click the QR-Code for detailed product information.

Further Information on www.autopstenhoj.com

AUTOPSTENHOJ GMBH
Sandkampstr. 90
D-48432 Rheine
Tel. +49 5971 860202
Emai: info@autopstenhoj.com

AUTOPSTENHOJ GMBH
Barrit Langgade 188-190
DK-7150 Barrit
Tel. +45 76 82 13 30
Emai: info@autopstenhoj.com

Recommended by Mercedes Benz
H41 01 08 1P

Technical data	
Lifting capacity	6,500 kg
Lifting height	1,865 mm
Working height	2,060 mm
Cylinder diameter	4 x 213 mm
Distance between cylinders	1,550 / 3,000 mm
Lifting / lowering time (high pressure)	approx. 35 sec.
Foundation depth	2,625 mm
Pump unit	2 x 3 kW
Hydraulic oil	18 l
Voltage	230 / 400 V – 50 Hz – 16 A

Fv Uni superstructure	
Usable legth of platform	F 550: 5,500 mm
Wheel base	F 550: 4,850 mm
Platform width	650 mm
Distance between platforms	900 mm
Drive-on height	195 mm

Scissor jack (Option)	
Lifting capacity	4,000 Kg
Lifting height	330 mm
Operation	air-hydraulic
Lift positions	middle / 880 – 1,734 mm

The product meets the requirements for workshop equipment for MB service workshops and is recommended by Mercedes Benz with approval no. H41 01 08 1P.

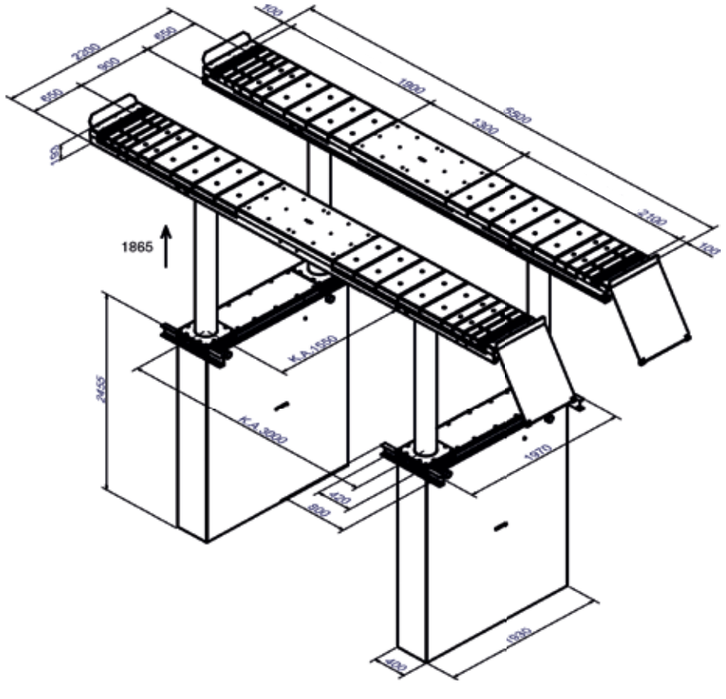

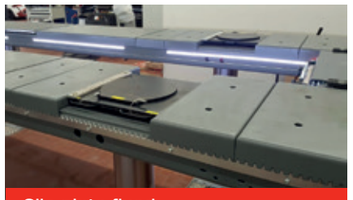

Slip plate fixed

Installation in rectangular recess

Slip plate and MKS adaptor

Illustrations are not binding and optional. Under reserve of dimensional, constructional and technical modifications! Validity 02/2023.

The sturdiest post on the market ...

We offer 5 years' warranty on spindles, nuts, seals and wires for our standard 2-post and 4-post lifts (except inspection models).*

* The warranty only applies if the annual maintenance has been carried out by trained and certified specialist personnel and has been documented accordingly.

... shouldn't be hidden in the ground.

All our 2-post lifts are equipped with cold-rolled spindles with nut sets made in high quality nylon, guaranteeing very little tear and wear. Our posts, irregardless of design are incredibly stable – to the benefit of all our customers.

Top quality is equal to a high degree of safety. Our surface-mounted lifts are naturally equipped with all necessary safety features.

The safety systems: There are quite a few.

You can rely on the many safety systems our surface-mounted lifts are equipped with:

- System against nut breakage
- Obstruction system
- Electronic synchronization
- Alarm signal
- Control unit with deadman-control and separate main switch

Small investment – many advantages.

- Low investment costs
- Many installation possibilities
- The right lift for the right purpose

From one advantage to the next.

THE MOST STABLE POST ON THE MARKET

COMBIFLEX-08 PAD

COLD-ROLLED SPINDLE

RATCHET FOR PARKING POSITION

CORROSION PROTECTION AND MUCH MORE

EASY HEIGHT ADJUSTMENT

INTERNAL ARM LOCKING SYSTEM

NUT SET OF HIGH QUALITY NYLON

PROVEN CARRIAGE DESIGN

Recommended by Mercedes Benz
098439

Maestro 2.35 NxT

Electro-mechanical 2-post lift, 3.5 t capacity

Scan the QR-Code
for detailed product information.

Further Information on
www.autopstenhoj.com

AUTOPSTENHOJ GMBH
Sandkampstr. 90
D-48432 Rheine
Tel. +49 5971 860202
Emai: info@autopstenhoj.com

AUTOPSTENHOJ GMBH
Barrit Langgade 188-190
DK-7150 Barrit
Tel. +45 76 82 13 30
Emai: info@autopstenhoj.com

Recommended by Mercedes Benz
098439

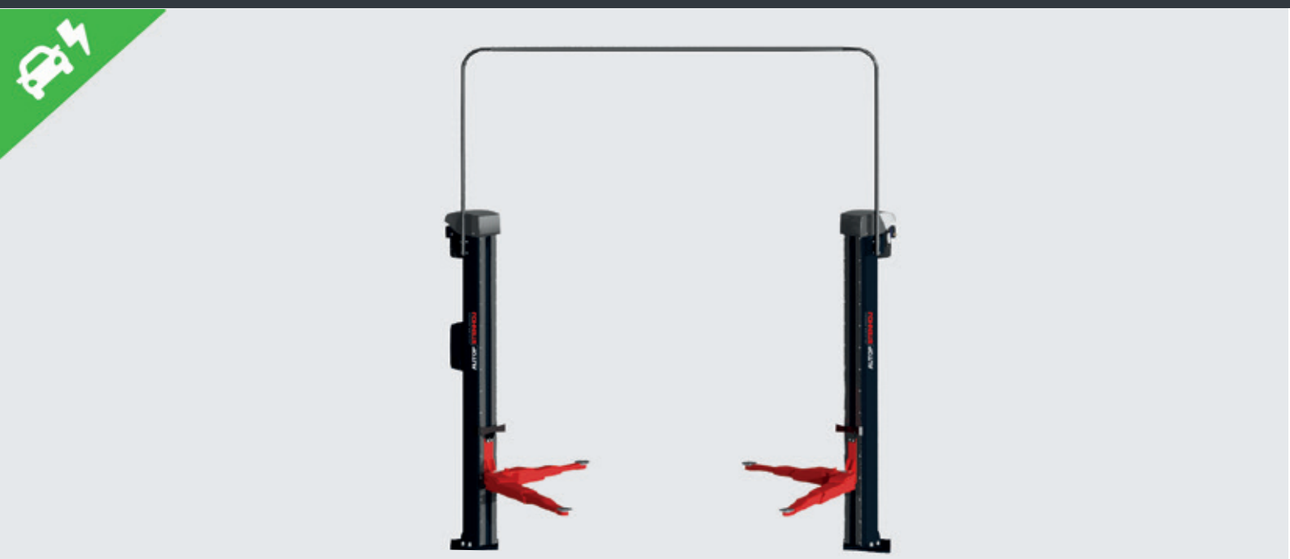

Technical data	
Lifting capacity	3,500 kg
Lifting height	1,900 mm
Working height	1,970 — 2,035 mm + 65 mm pad extensions
Lifting / lowering time	approx. 35 sec.
Motor	2 x 2.8 kW
Voltage	3x230/400 V-50Hz - 20A

Arm superstructure	
Lifting pad included in the delivery	95 mm
Min. height	95 - 135 mm
Drive-through width	DT/ST: 2,466 mm
Width between posts	DT/ST: 2,759 mm
Total width - outer edges base plates	DT/ST: 3.500 mm
Total height post	2,713 mm
Total height incl. Portal	3,990 - 4,350 mm
Arm length front, min. - max.	DT: 555 - 1.100 mm
Arm length rear, min. - max.	ST: 925 - 1.550 mm

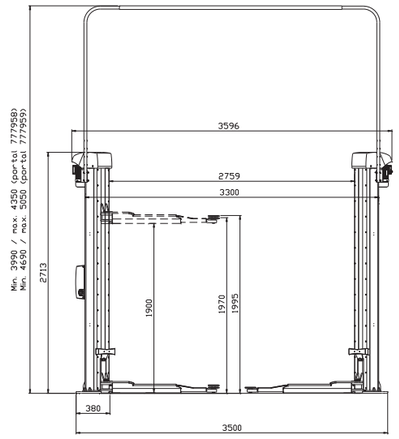

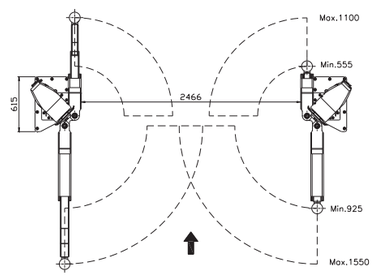

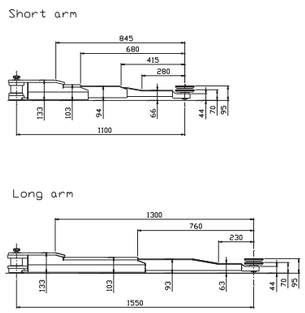

Application

- Repair and maintenance

Description:

Posts:

- Asymmetric post installation, vehicles can be positioned in rear area of work bay, for better door-opening angle
- Very stable welded posts
- Without base frame, therefore free drive-in situation
- Two strong electric motors
- Cold-rolled spindles for high durability
- Nylon nut sets for high durability
- Carriage with 6 guiding wheels and lubrication-free roller bearings, for very low friction
- Door-stop mounted on carriage
- Obstruction system for stopping the lift when it hits an obstracle
- Pushbutton control unit with alarm signal
- Programmable limit switch for top stop and CE-stop
- Electronic synchronization through comparison of pulses on both columns

Arms:

- Arms DT/ST: Universal lifting area from Smart up to Vito / Viano with lifting pad type „F“
- Possibility of parallel parking of arms for easier and faster positioning of vehicles
- Arms can be opened more than 180° for better drive-in situation (+45°) for lifts installed in 90° angle to the drive lane
- Internal arm locking system, protected against moisture and dirt, with strong 360° interlocking
- Low minimum height

Colour according to approval:

- RAL 7015 - slate grey

Versions:

- Available with different voltages
- F = flex pad

Optional extras:

- Available with different portal heights, alternatively inground kit
- Set of expansion bolts
- LED-lighting set
- Energy set with compressed air and socket-outlet
- Extra control unit for second column
- Wheel supports
- Large program of extra pads, depending on type of vehicle

The product meets the requirements for workshop equipment for MB service workshops and is recommended by Mercedes Benz with approval no. 098439.

Stable, welded post

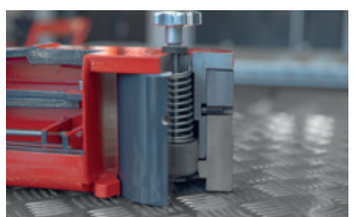

Internal arm locking system

Carriage with rollers

Illustrations are not binding and optional. Under reserve of dimensional, constructional and technical modifications! Validity 02/2023.

Recommended by Mercedes Benz
H21 01 06 1L

Maestro 2.65

Electro-mechanical 2-post lift, 6.5 t capacity

Scan the QR-Code
for detailed product information.

Further Information on
www.autopstenhoj.com

AUTOPSTENHOJ GMBH
Sandkampstr. 90
D-48432 Rheine
Tel. +49 5971 860202
Emai: info@autopstenhoj.com

AUTOPSTENHOJ GMBH
Barrit Langgade 188-190
DK-7150 Barrit
Tel. +45 76 82 13 30
Emai: info@autopstenhoj.com

Recommended by Mercedes Benz
H21 01 06 1L

Technical data	
Lifting capacity	6,500 kg
Lifting height	1,900 mm
Working height	2,045 – 2,105 mm
Lifting / lowering time	approx. 35 sec.
Motor	2 x 4 kW
Voltage	3 x 230 / 400V – 50 Hz – 35 / 25 A

Arm superstructure	
Lifting pad included in the delivery	F: 11028 (90 – 150 mm)
Min. height	145 mm
Drive-through width	2,829 mm
Width between posts	3,170 mm
Total width - outer edges posts	3,560 mm
Total width - outer edges base plates	4,000 mm
Total height post	2,908 mm
Total height incl. portal	4,910 – 5,270 mm
Arm length front, min. - max.	770 – 1,640 mm
Arm length rear, min. - max.	770 – 1,640 mm

Application

- Repair and maintenance

Description:

Posts:
- Symmetric post installation
- Very stable welded posts
- Without base frame
- Two motors
- Cold-rolled spindle
- Nylon nut sets
- Carriage with 6 guiding wheels and lubrication-free roller bearings
- Pushbutton control unit with alarm signal
- Programmable top stop
- Electronic synchronization

Arms:
- 4 triple telescopic arms
- Wheel bearing of the first extension arm
- Low minimum height

Colour according to approval:
- RAL 7015 - slate grey

Versions:

- Available with different voltages
- F = flex pad

Optional extras:

- Available with portal or in-ground kit
- LED-lighting set
- Power pack
- Set of expansion bolts
- Extra control unit
- Wheel holders
- Large program of extra pads

The product meets the requirements for workshop equipment for MB service workshops and is recommended by Mercedes Benz with approval no. H21 01 06 1L.

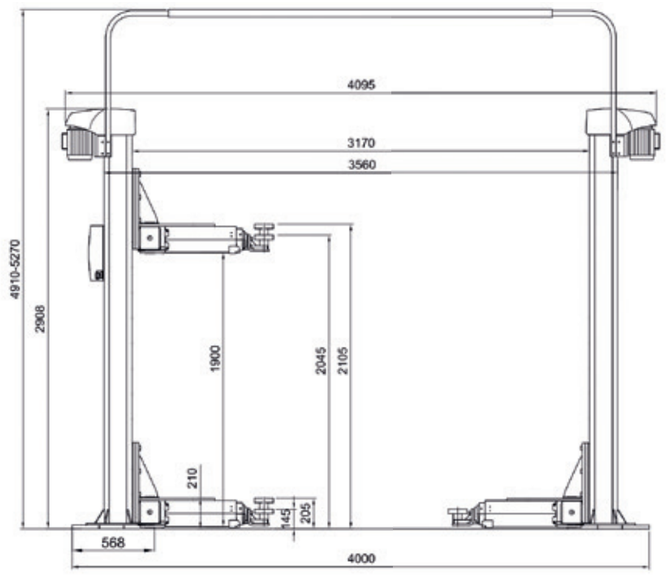

Triple telescopic arms with F-pad

Stable, welded post

Carriage with rollers

Illustrations are not binding and optional. Under reserve of dimensional, constructional and technical modifications! Validity 02/2023.

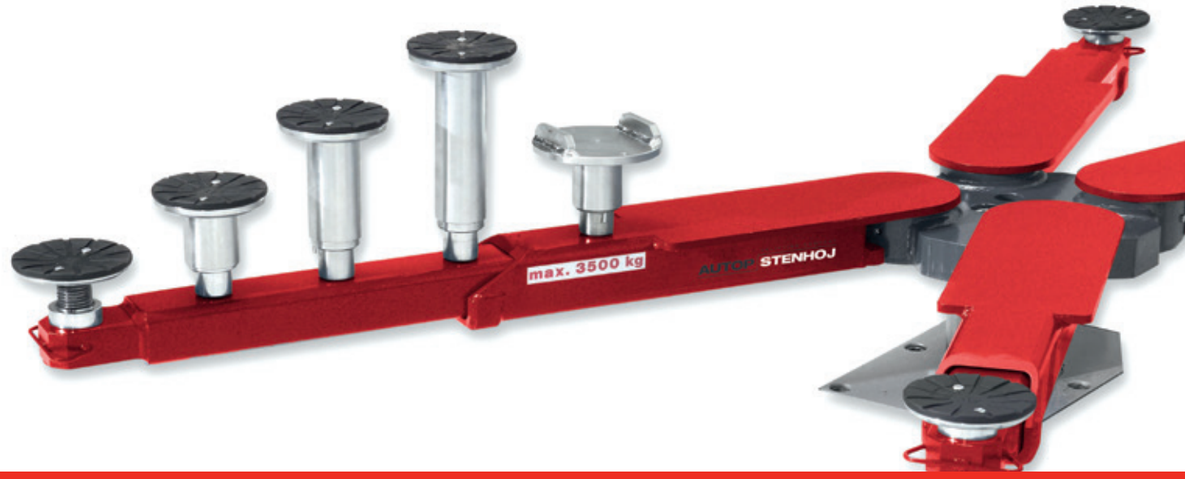

Safe lifting at the highest level.

AUTOPSTENHOJ offers lifts for all kinds of vehicles, and with the extensive range of optional extras such as pads, rubber blocks and wheel supports we offer a unique, safe and professional solution just for your requirement.

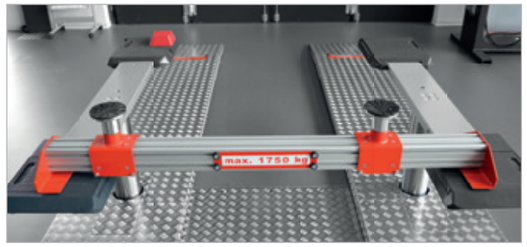

AUTOPSTENHOJ pads offer flexibility.

- A wide range of extra pads that enable lifting of vehicles with even very difficult lifting points
- Pads for both inground and surface-mounted lifts
- Fixed as well as adjustable pads in many different heights

Rubber pads for all vehicles.

- Offers full protection of underbody, when lifting on the recommended lifting points
- Various designs and sizes available

Wheel supports – experience the advantages!

- Easy access to underbody of vehicle
- Ideal as lift can be used for different applications
- Standard distance between supports: 400 mm
- Offroad distance between supports: 500 mm
- Lifting capacity: 875 kg (per wheel support)

Exclusive advantages with exclusive lifts.

The wheel supports are optimised for inground swivel arm lifts as well as some 2-post lifts from AUTOPSTENHOJ and may only be used on these lifts. Please contact us - we will be happy to advise you!

Jet Cleaner RC 82/122

Parts cleaning machines

Click the QR-Code
for detailed product information.

Further Information on
www.autopstenhoj.com

Description:

Parts cleaning machines made of stainless steel for economical and ecological parts cleaning, degreasing on water basis using spray nozzels.

- ☐ Compact and sturdy design
- ☐ Made of stainless steel
- ☐ Simple handling
- ☐ Space saving
- ☐ 3D-blast pipe system incl. flat fan nozzles
- ☐ Low-water level alarm
- ☐ Safety limit switch on cover

Tub cover:

- ☐ Track rollers + fixed rollers

Versions:

- ☐ RC 82 with 790 mm usable basket diameter
- ☐ RC 122 with 1190 mm usable basket diameter

Optional extras:

- ☐ Heating timer
- ☐ Oil skimmer
- ☐ Economy insulation
- ☐ Detergents & small parts baskets
- ☐ Service counter

Technical Data		
	RC 82	RC 122
Usable basket diameter	790 mm	1.190 mm
Usable height	500 mm	500 mm
Loading height	930 mm	830 mm
Max. basket load	300 kg	500 kg
Liquid volume	150 l	370 l
Pump ratio	200 l / min	280 l / min
Pump pressure	3 bar	5 bar
Voltage	230 / 400 V - 50 Hz - 14 A	230 / 400 V - 50 Hz - 24 A
Pump motor rating	1.5 kW	4 kW
Heating	6 kW	9 + 6 kW
Basket drive	Jet of water	E-Motor 0.09 kW
Total height	approx. 1,200 mm	approx. 1,300 mm
Total width	approx. 1,300 mm	approx. 1,650 mm
Total depth	approx. 1,300 mm	approx. 1,500 mm
Total weight	approx. 220 kg	approx. 350 kg

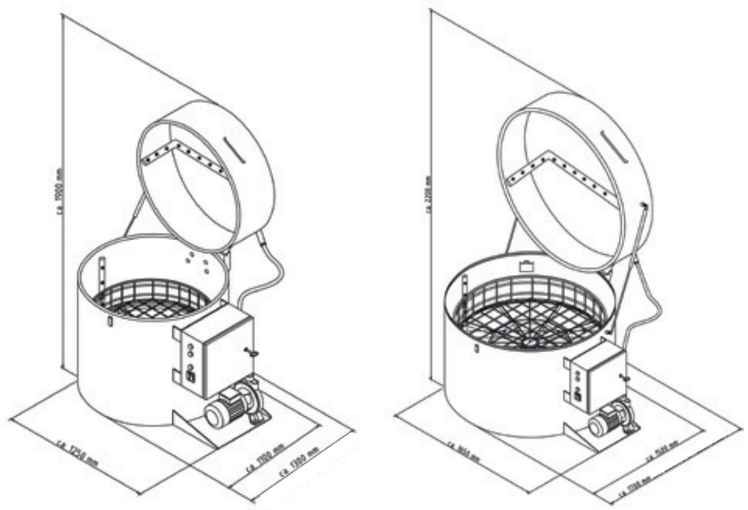

Before cleaning

After cleaning

Masterlift 2.35 Pv 160-220 xy

Electro-hydraulic twin-ram lift, 3.5 t capacity, superstructure with flat lifting supports

AUTOPSTENHOJ GmbH
Tel. +49 5971 8602-02 (DE)
Tel +45 76821-330 (DK)
Mail: info@autopstenhoj.com
Web: www.autopstenhoj.com

UPLIFTING COMPANY AUTOP STENHOJ

OEM approved Article List | Mercedes-Benz
01 February 2022

OEM Nr.
01|2023.01.01
↓Edition↓

Items marked with this > arrow are to be ordered, if you want standard version >

Our general terms of sales and delivery apply.

Masterlift 2.35 Pv Premium 160-220 xy

Item no.	Description (EN)	DC		OEM Nr.
	Superstructure			
20830	Repair platform superstructure 2.35 Pv 160-220 - spray-galvanized and painted		>	H13 01 01 1A
	Hydraulic unit			
10270	Hydraulic unit ML 2.35, KA1335, stroke 1950 mm		>	H13 01 01 1A
11063	Set of cables 10m (Std. EL, ML, PL, BL)			
	Oil			
12030	Oil filling 10 ltr.			
12033	Ecological hydraulic fluid 10 ltr.		>	H13 01 01 1A
	Cassettes			
12275	Cassette 1350 mm, depth 2415 mm			
12114	Cassette 2300 with bore pattern 1350			
12191	Lateral covers for cassette 12114 with lift 1315/1335			
12906	Cassette 1350 mm, depth 2415 mm, galvanized			
11099	Pre-assembly(cylinders in cassette)			
	Colors and approvals			
12462	Colours for MB- approval: Typ "Pv" in RAL 7015, Slate Grey		>	H13 01 01 1A
	Lift specific accessories and options			
11060	Extra-charge for xy-heads1 set = 4 pcs		>	H13 01 01 1A
11005	1 set Rubber blocs 20 mm, 1 set = 4 pcs			
11102	1 set Rubber blocs 40 mm, 1 set = 4 pcs		>	H13 01 01 1A
11001	1 set Rubber blocs 60 mm, 1 set = 4 pcs			
11000	1 set Rubber blocs 80 mm, 1 set = 4 pcs			
11103	1 pcs Documentholder "AUTOPSTENHOJ"		>	H13 01 01 1A
11104	1 set magnetic tool tray set, 1 set = 2 pcs		>	H13 01 01 1A
12374	1 pcs Control column for ML, PL, BL, QL			
12162	1 pcs Flat foundation frame withcover, piston distance 1350			
12290	Extra charge for Bore pattern MD 90 in cassette frame			
12149	1 pcs Wooden-aluminium cover forempty cassettes 1350 mm			
12200	Extra charge for hydraulicadjustment MD-90, stroke 1800 mm			
23839	1 pcs Aluminium lifting traverse for repair platforms KA 1335 or KA 1550, especially for lifting 4x4 vehicles, distance lifting points min. 500mm - max. 1200mm, without lifting pads, max. 1750 kg capacity, 1 set = 2 pcs, min. height = 175 mm, for uns of lifting pads no. 29265			

All rights reserved. © AUTOPSTENHOJ 2023
Alle Rechte vorbehalten. © AUTOPSTENHOJ 2023

Masterlift 2.35 Saa 260

Electro-hydraulic twin-ram lift, 3.5 t capacity, superstructure with arms

AUTOPSTENHOJ GmbH
Tel. +49 5971 8602-02 (DE)
Tel +45 76821-330 (DK)
Mail: info@autopstenhoj.com
Web: www.autopstenhoj.com

UPLIFTING COMPANY AUTOP STENHOJ

OEM approved Article List | Mercedes-Benz
01 February 2022

OEM Nr.
01|2023.01.01
↓Edition↓

Items marked with this > arrow are to be ordered, if you want standard version >

Our general terms of sales and delivery apply.

Masterlift 2.35 Saa 260 Universal

Item no.	Description (EN)	DC		OEM Nr.
	Superstructure			
21104	Swivel arm superstructure 2.35 Saa 260 Universal, incl. Liting pads 11027, min. height 95 mm		>	H11 01 16 1A
	Hydraulic unit			
10245	Hydraulic unit ML 2.35 KA 2600, stroke 1900 mm		>	H11 01 01 1A
11063	Set of cables 10m (Std. EL, ML, PL, BL)			
	Oil			
12030	Oil filling 10 ltr.			
12033	Ecological hydraulic fluid 10 ltr.		>	H11 01 01 1A
	Cassettes			
12108	Cassette 2600 ML and bore pattern 1350 centric			
12943	Cassette 2600 ML hot galvanized, incl. bore pattern 1350			
12947	Lateral covers for cassette 12108 / 12943 with lift 1315/1335			
11099	Pre-assembly(cylinders in cassette)			
	Colors and approvals			
12172	Colours for MB- approval: Typ "S" in RAL 7015, Slate Grey		>	H11 01 01 1A
12362	Extra cost for cathodic dip coating and painting 2-ram Saa, Chassis are zinc coated and painted			
	Lift specific accessories and options			
11103	1 pcs Documentholder "AUTOPSTENHOJ"		>	H11 01 01 1A
11104	1 set magnetic tool tray set, 1 set = 2 pcs		>	H11 01 01 1A
20985	1 set Wheel support device "Standard" (400 mm) 1 set = 4 pieces, capacity per item max. 875 kg (only for inground lifts and the following surface mounted lifts Maestro 35 M/H Premium, Maestro 2.35 F Sport, Maestro 2,35 F Premium. Wheel support can only be combined with the F version of the lifts.			
20772	1 set Wheel support device "Offroad" (500 mm) 1 set = 4 pieces, capacity per item max. 875 kg (only for inground lifts and the following surface mounted lifts Maestro 35 M/H Premium, Maestro 2.35 F Sport, Maestro 2,35 F Premium. Wheel support can only be combined with the F version of the lifts.			
29265	4 pcs of lifting pads Ø120/70/95, 1 set = 4 pcs			
11127	1 set Lifting pad extension 65mm suitable for all surface and inground lifts, 1 set = 4 pcs			
11107	1 set Lifting pad extension 100 mm suitable for all surface and inground lifts, 1 set = 4 pcs			
21105	1 set Manual unlocking system for 3.5 t Saa, 1 set = 4 pcs			
11017	1 set lifting pads for Mercedes "G- Class", 1 set = 4 pcs			
11108	1 set Safetyratch to mount on arm and chassis of vehicle as anti-tipping device, 1 set = 2 pcs			
12374	1 pcs Control column for ML, PL, BL, QL			
11105	1 set Drive on assist Rubber HxWxL = 50x500x1000mm, 1 Set = 2 pieces			
12152	1 pcs Alu-wooden cover for empty cassette 2600mm			
12166	1 pcs Flat foundation frame 2.600mm			

All rights reserved. © AUTOPSTENHOJ 2023
Alle Rechte vorbehalten. © AUTOPSTENHOJ 2023

Illustrations are not binding and optional. Under reserve of dimensional, constructional and technical modifications! Validity 02/2023.

Masterlift 2.35 Saav 135 VAN

Electro-hydraulic twin-ram lift, 3.5 t capacity, superstructure with adjustable arms

AUTOPSTENHOJ GmbH
Tel. +49 5971 8602-02 (DE)
Tel +45 76821-330 (DK)
Mail: info@autopstenhoj.com
Web: www.autopstenhoj.com

UPLIFTING COMPANY AUTOP STENHOJ

OEM approved Article List | Mercedes-Benz
01 February 2022

OEM Nr.
01|2023.01.01
↓Edition↓

Items marked with this > arrow are to be ordered, if you want standard version

Our general terms of sales and delivery apply.

	Masterlift 2.35 Saav 135 "Van" Universal			OEM Nr.
Item no.	Description (EN)	DC		
	Superstructure			
20788	Swivel arm superstructure 2.35 Saav 135 "Van" - Universal - incl. Lifting pads 11027 - min.height 95mm		>	H11 01 01 1A
	Hydraulic unit			
10270	Hydraulic unit ML 2.35, KA1335, stroke 1950 mm		>	H11 01 01 1A
11063	Set of cables 10m (Std. EL, ML, PL, BL)			
	Oil			
12030	Oil filling 10 ltr.			
12033	Ecological hydraulic fluid 10 ltr.		>	H11 01 01 1A
	Cassettes			
12275	Cassette 1350 mm, depth 2415 mm			
12114	Cassette 2300 with bore pattern 1350			
12191	Lateral covers for cassette 12114 with lift 1315/1335			
12906	Cassette 1350 mm, depth 2415 mm, galvanized			
11099	Pre-assembly(cylinders in cassette)			
	Colors and approvals			
12172	Colours for MB- approval: Typ "S" in RAL 7015, Slate Grey		>	H11 01 01 1A
12362	Extra cost for cathodic dip coating and painting 2-ram Saa, Chassis are zinc coated and painted			
	Lift specific accessories and options			
11103	1 pcs Documentholder "AUTOPSTENHOJ"		>	H11 01 01 1A
11104	1 set magnetic tool tray set, 1 set = 2 pcs		>	H11 01 01 1A
20985	1 set Wheel support device "Standard" (400 mm) 1 set = 4 pieces, capacity per item max. 875 kg (only for inground lifts and the following surface mounted lifts Maestro 35 M/H Premium, Maestro 2.35 F Sport, Maestro 2,35 F Premium. Wheel support can only be combined with the F version of the lifts.			
20772	1 set Wheel support device "Offroad" (500 mm) 1 set = 4 pieces, capacity per item max. 875 kg (only for inground lifts and the following surface mounted lifts Maestro 35 M/H Premium, Maestro 2.35 F Sport, Maestro 2,35 F Premium. Wheel support can only be combined with the F version of the lifts.			
29265	4 pcs of lifting pads Ø120/70/95, 1 set = 4 pcs			
11127	1 set Lifting pad extension 65mm suitable for all surface and inground lifts, 1 set = 4 pcs			
11107	1 set Lifting pad extension 100 mm suitable for all surface and inground lifts, 1 set = 4 pcs			
11017	1 set lifting pads for Mercedes "G- Class", 1 set = 4 pcs			
11108	1 set Safetyratch to mount on arm and chassis of vehicle as anti-tipping device, 1 set = 2 pcs			
12374	1 pcs Control column for ML, PL, BL, QL			
11105	1 set Drive on assist Rubber HxWxL = 50x500x1000mm, 1 Set = 2 pieces			
12162	1 pcs Flat foundation frame withcover, piston distance 1350			
12290	Extra charge for Bore pattern MD 90 in cassette frame			
12149	1 pcs Wooden-aluminium cover forempty cassettes 1350 mm			
12200	Extra charge for hydraulicadjustment MD-90, stroke 1800 mm			

All rights reserved. © AUTOPSTENHOJ 2023
Alle Rechte vorbehalten. © AUTOPSTENHOJ 2023

Masterlift 2.35 Combi Check-in – KA 1550

Electro-hydraulic 2x twin-ram lift, 3.5 t, platforms and free-wheel lift with flat lifting supports

AUTOPSTENHOJ GmbH
Tel. +49 5971 8602-02 (DE)
Tel +45 76821-330 (DK)
Mail: info@autopstenhoj.com
Web: www.autopstenhoj.com

UPLIFTING COMPANY AUTOP STENHOJ

OEM approved Article List | Mercedes-Benz
01 February 2022

OEM Nr.
01|2023.01.01
↓Edition↓

Items marked with this > arrow are to be ordered, if you want standard version

Our general terms of sales and delivery apply.

	Masterlift 2.35 Combi Check-in - KA 1550 on floor			OEM Nr.
Item no.	Description (EN)	DC		
	Superstructure Platform on-floor			
21500	Superstructure platform 2.35 F 440 Combi Check in, on-floor, with ramps and integrated automatically rising stoppers in front and rear, incl. LED-lighting		>	H12 01 04 1L
	Flat support superstructures			
21504	Repair platform superstructure 2.35 Pv 160 - 220 xy, spray-galvanized and painted		>	H12 01 04 1L
	Hydraulic unit			
10290	Hydraulic unit ML 2.35 Combi Check in, KA 1550, stroke 1900 mm		>	H12 01 04 1L
11071	Set of cables 10m (Combi, Fn)			
	Oil			
12035	Oil filling 17 ltr.			
12036	Ecological hydraulic fluid 17 ltr.		>	H12 01 04 1L
	Cassettes			
12117	Cassettes 1550 mm ML Combi Check in			
12118	Cassettes 1550 mm ML Combi Check in, hot galvanized			
11097	pre-installation of the hydraulic			
	Colors and approvals			
12466	Colours for MB- approval: Typ "Fn/Combi" in RAL 7015, Slate Grey		>	H12 01 04 1L
12407	Extra charge for spray-galvanized platforms ML, PL & BL		>	H12 01 04 1L
	Lift specific accessories and options			
S1917	1 set Support strike plate for platforms for Headlight adjustment places cpl. For on floor and recessed Version without flush floor device (german law)			
11109	1 pcs.16 A circuit breaker in control box		>	H12 01 04 1L
21080	1 pcs Power distribution for one platform (Schuko plug 230 V / 16 A / IP54)		>	H12 01 04 1L
21097	1 pcs Pneumatic installation Combi CH 2.35 for 1 side of the platform (each 1 T-piece front and back)		>	H12 01 04 1L
11102	1 set Rubber blocs 40 mm, 1 set = 4 pcs		>	H12 01 04 1L
11001	1 set Rubber blocs 60 mm, 1 set = 4 pcs			
11000	1 set Rubber blocs 80 mm, 1 set = 4 pcs			
11103	1 pcs Documentholder "AUTOPSTENHOJ"		>	H13 01 01 1A
11104	1 set magnetic tool tray set, 1 set = 2 pcs		>	H13 01 01 1A
12374	1 pcs Control column for ML, PL, BL, QL			
23839	1 pcs Aluminium lifting traverse for repair platforms KA 1335 or KA 1550, especially for lifting 4x4 vehicles, distance lifting points min. 500mm - max. 1200mm, without lifting pads, max. 1750 kg capacity, 1 set = 2 pcs, min. height = 175 mm, for uns of lifting pads no. 29265			

All rights reserved. © AUTOPSTENHOJ 2023
Alle Rechte vorbehalten. © AUTOPSTENHOJ 2023

Illustrations are not binding and optional. Under reserve of dimensional, constructional and technical modifications! Validity 02/2023.

Biglift 2.50 Saa 265

Electro-hydraulic twin-ram lift, 5 t with superstructure with arms

AUTOPSTENHOJ GmbH
Tel. +49 5971 8602-02 (DE)
Tel +45 76821-330 (DK)
Mail: info@autopstenhoj.com
Web: www.autopstenhoj.com

UPLIFTING COMPANY AUTOP STENHOJ

OEM approved Article List | Mercedes-Benz
01 February 2022

OEM Nr.
01|2023.01.01
↓Edition↓

Items marked with this > arrow are to be ordered, if you want standard version >

Our general terms of sales and delivery apply.

	Biglift 2.50 Saa 265			OEM Nr.
Item no.	Description (EN)	DC	>	
	Superstructure			
20789	Superstructure 2.50 Saa 265 Ø213, incl. Lifting pad 11028 (135-195mm)		>	H21 01 04 1B
	Hydraulic units			
10289	Hydraulic unit BL (Ø213) Saa, 5,0t 2650, Lifting height 1860		>	H21 01 04 1B
11063	Set of cables 10m (Std. EL, ML, PL, BL)			
	Oil			
12035	Oil filling 17 ltr.			
12036	Ecological hydraulic fluid 17 ltr.		>	H21 01 04 1B
	Cassettes			
12106	Cassette BL 2650 mm, Cyl.-Ø 213 mm			
12936	Cassette BL 2650 mm, Cyl.-Ø 213 mm, hot galvanized			
11097	pre-installation of the hydraulic			
	Colors and approvals			
12172	Colours for MB- approval: Typ "S" in RAL 7015, Slate Grey		>	H21 01 04 1B
12362	Extra cost for cathodic dip coating and painting 2-ram Saa, Chassis are zinc coated and painted			
	Lift specific accessories and options			
	Accessories			
11103	1 pcs Documentholder "AUTOPSTENHOJ"		>	H21 01 04 1B
11104	1 set magnetic tool tray set, 1 set = 2 pcs		>	H21 01 04 1B
20985	1 set Wheel support device "Standard" (400 mm) 1 set = 4 pieces, capacity per item max. 875 kg (only for inground lifts and the following surface mounted lifts Maestro 35 M/H Premium, Maestro 2.35 F Sport, Maestro 2,35 F Premium. Wheel support can only be combined with the F version of the lifts.			
20772	1 set Wheel support device "Offroad" (500 mm) 1 set = 4 pieces, capacity per item max. 875 kg (only for inground lifts and the following surface mounted lifts Maestro 35 M/H Premium, Maestro 2.35 F Sport, Maestro 2,35 F Premium. Wheel support can only be combined with the F version of the lifts.			
11027	4 pcs of lifting pads Ø120/95/135, 1 set = 4 pcs			
11127	1 set Lifting pad extension 65mm suitable for all surface and inground lifts, 1 set = 4 pcs			
11107	1 set Lifting pad extension 100 mm suitable for all surface and inground lifts, 1 set = 4 pcs			
11017	1 set lifting pads for Mercedes "G- Class", 1 set = 4 pcs			
11040	Set of lifting pad "spike" for Sprinter 1 Set = 2 pieces			
11040	Set of lifting pads "prism" for Sprinter 1 Set = 2 pieces			
11108	1 set Safetyratch to mount on arm and chassis of vehicle as anti-tipping device, 1 set = 2 pcs			
12374	1 pcs Control column for ML, PL, BL, QL			
11105	1 set Drive on assist Rubber HxWxL = 50x500x1000mm, 1 Set = 2 pieces			
12155	1 pcs Alu-wooden cover for empty cassette 2650mm			

All rights reserved. © AUTOPSTENHOJ 2023
Alle Rechte vorbehalten. © AUTOPSTENHOJ 2023

UPLIFTING COMPANY AUTOP STENHOJ

Biglift 2.65 Saaa 265

Electro-hydraulic twin-ram lift, 6.5 t capacity, superstructure with arms

AUTOPSTENHOJ GmbH
Tel. +49 5971 8602-02 (DE)
Tel +45 76821-330 (DK)
Mail: info@autopstenhoj.com
Web: www.autopstenhoj.com

UPLIFTING COMPANY AUTOP STENHOJ

OEM approved Article List | Mercedes-Benz
01 February 2022

OEM Nr.
01|2023.01.01
↓Edition↓

Items marked with this > arrow are to be ordered, if you want standard version >

Our general terms of sales and delivery apply.

	Biglift 2.65 Saaa 265			OEM Nr.
Item no.	Description (EN)	DC	>	
	Superstructure			
20783	Swivel arm superstructure 2.65 Saaa 265, incl. Lifting pads 11028, (135-195 mm)		>	H21 01 04 1A
	Hydraulic units			
10287	Hydraulic unit BL Saaa 6,5t 2650mm		>	H21 01 04 1A
11063	Set of cables 10m (Std. EL, ML, PL, BL)			
	Oil			
12035	Oil filling 17 ltr.			
12036	Ecological hydraulic fluid 17 ltr.		>	H21 01 04 1A
	Cassettes			
12106	Cassette BL 2650 mm, Cyl.-Ø 213 mm			
12936	Cassette BL 2650 mm, Cyl.-Ø 213 mm, hot galvanized			
11097	pre-installation of the hydraulic			
	Colors and approvals			
12172	Colours for MB- approval: Typ "S" in RAL 7015, Slate Grey		>	H21 01 04 1B
12362	Extra cost for cathodic dip coating and painting 2-ram Saa, Chassis are zinc coated and painted			
	Lift specific accessories and options			
	Accessories			
11103	1 pcs Documentholder "AUTOPSTENHOJ"		>	H21 01 04 1B
11104	1 set magnetic tool tray set, 1 set = 2 pcs		>	H21 01 04 1B
20985	1 set Wheel support device "Standard" (400 mm) 1 set = 4 pieces, capacity per item max. 875 kg (only for inground lifts and the following surface mounted lifts Maestro 35 M/H Premium, Maestro 2.35 F Sport, Maestro 2,35 F Premium. Wheel support can only be combined with the F version of the lifts.			
20772	1 set Wheel support device "Offroad" (500 mm) 1 set = 4 pieces, capacity per item max. 875 kg (only for inground lifts and the following surface mounted lifts Maestro 35 M/H Premium, Maestro 2.35 F Sport, Maestro 2,35 F Premium. Wheel support can only be combined with the F version of the lifts.			
11027	4 pcs of lifting pads Ø120/95/135, 1 set = 4 pcs			
11127	1 set Lifting pad extension 65mm suitable for all surface and inground lifts, 1 set = 4 pcs			
11107	1 set Lifting pad extension 100 mm suitable for all surface and inground lifts, 1 set = 4 pcs			
11017	1 set lifting pads for Mercedes "G- Class", 1 set = 4 pcs			
11040	Set of lifting pad "spike" for Sprinter 1 Set = 2 pieces			
11040	Set of lifting pads "prism" for Sprinter 1 Set = 2 pieces			
11108	1 set Safetyratch to mount on arm and chassis of vehicle as anti-tipping device, 1 set = 2 pcs			
12374	1 pcs Control column for ML, PL, BL, QL			
11105	1 set Drive on assist Rubber HxWxL = 50x500x1000mm, 1 Set = 2 pieces			
12155	1 pcs Alu-wooden cover for empty cassette 2650mm			

All rights reserved. © AUTOPSTENHOJ 2023
Alle Rechte vorbehalten. © AUTOPSTENHOJ 2023

Illustrations are not binding and optional. Under reserve of dimensional, constructional and technical modifications! Validity 02/2023.

Biglift 2.65 F 550

Electro-hydraulic twin-ram lift, 6.5 t capacity, platforms

AUTOPSTENHOJ GmbH
Tel. +49 5971 8602-02 (DE)
Tel +45 76821-330 (DK)
Mail: info@autopstenhoj.com
Web: www.autopstenhoj.com

UPLIFTING COMPANY AUTOP STENHOJ

OEM approved Article List | Mercedes-Benz
01 February 2022

OEM Nr.
01|2023.01.01
↓Edition↓

Items marked with this > arrow are to be ordered, if you want standard version >

Our general terms of sales and delivery apply.

	Biglift 2.65 F 550			OEM Nr.
Item no.	Description (EN)	DC	>	
	Superstructure Platform			
21507	Superstructure platform 2.65 F 550		>	H23 13 10 7A
	Hydraulic unit			
10291	Hydraulic unit BL Ø 213, KA 1550mm, stroke 1860		>	H23 13 10 7A
11063	Set of cables 10m (Std. EL, ML, PL, BL)			
	Oil			
12035	Oli filling 17 ltr.			
12036	Ecological hydraulic fluid 17 ltr.		>	H23 13 10 7A
	Cassette			
12173	Cassette BL 1550mm			
12174	Cassette BL 1550mm, hot galvanized			
11097	pre-installation of the hydraulic			
	Drive-on flaps - Stoppers			
21100	Drive-on flaps on floor 1100mm, 10°, 1 Set = 2 pcs		>	H23 13 10 7A
21083	Drive-on flaps on floor , L=1450mm, two-piece, 8°, 1 Set = 2 pcs			
21084	Stoppers, H=100mm, 1 Set = 2 pcs		>	H23 13 10 7A
	Colors and approvals			
12466	Colours for MB- approval: Typ "Fn/Combi" in RAL 7015, Slate Grey		>	H23 13 10 7A
12468	Colours for MB- approval: Typ "jacking beam" in RAL 7015, Slate Grey		>	H23 13 10 7A
12407	Extra charge for spray-galvanized platforms ML, PL & BL		>	H23 13 10 7A
	Lift specific accessories and options			
S1917	1 set Support strike plate for platforms for Headlight adjustment places cpl. For on floor and recessed Version without flush floor device (german law)			
12942	1 set LED Illumination, 3 pcs per platform			
11109	1 pcs.16 A circuit breaker in control box		>	H23 13 10 7A
21080	1 pcs Power distribution for one platform (Schuko plug 230 V / 16 A / IP54)		>	H23 13 10 7A
21096	1 pcs Pneumatic installation BL 2.65 F 550 for 1 side of the platform (each 1 T-piece front and back)		>	H23 13 10 7A
11103	1 pcs Documentholder "AUTOPSTENHOJ"		>	H23 13 10 7A
11104	1 set magnetic tool tray set, 1 set = 2 pcs		>	H23 13 10 7A
12374	1 pcs Control column for ML, PL, BL, QL			
12240	1 pcs Crossbeam for on-floor platforms			
21093	1 pcs Jacking beam A air hydr. 4t, incl. innovative air supply, incl. Sidewalls for BL 2.55 F 550		>	H23 13 10 7A
12925	1 set Lifting pad adapter for jacking beam "A", (1 Set = 2 pieces)		>	H23 13 10 7A
11027	4 pcs of lifting pads Ø120/95/135, 1 set = 4 pcs		>	H23 13 10 7A

All rights reserved. © AUTOPSTENHOJ 2023
Alle Rechte vorbehalten. © AUTOPSTENHOJ 2023

Biglift 4.55 Combi

Electro-hydraulic 2x twin-ram lift, 5.5 t capacity, platforms and free-wheel lift with arms

AUTOPSTENHOJ GmbH
Tel. +49 5971 8602-02 (DE)
Tel +45 76821-330 (DK)
Mail: info@autopstenhoj.com
Web: www.autopstenhoj.com

UPLIFTING COMPANY AUTOP STENHOJ

OEM approved Article List | Mercedes-Benz
01 February 2022

OEM Nr.
01|2023.01.01
↓Edition↓

Items marked with this > arrow are to be ordered, if you want standard version >

Our general terms of sales and delivery apply.

	Biglift 4.55 F550 Combi Saav			OEM Nr.
Item no.	Description (EN)	DC	>	
	Superstructure Platform			
21509	Superstructure platform 4.55 F 550 Combi		>	H22 13 10 7A
	Superstructure with arms			
21205	Swivel arm superstructure 4.55 Saav 155 Combi, incl. Lifting pads 11028, min height 135mm		>	H22 13 10 7A
	Hydraulic unit			
10295	Hydraulic unit BL 4.55-1240/1850-Combi on-floor or recessed without flush-floor-device		>	H22 13 10 7A
11071	Set of cables 10m (Combi, Fn)			
	Oil			
12037	Oil filling, 20 ltr.			
12038	Ecological hydraulic fluid, 20 ltr.		>	H22 13 10 7A
	Cassettes			
12245	Cassette Combilift 5,5 t, Cyl. Ø 140			
12246	Cassette Combilift 5,5 t, Cyl. Ø 140, hot galvanized			
11096	Pre assembly in the factory			
	Drive-on ramps - Stoppers			
21100	Drive-on flaps on floor 1100mm, 10°, 1 Set = 2 pcs		>	H22 13 10 7A
21083	Drive-on flaps on floor , L=1450mm, two-piece, 8°, 1 Set = 2 pcs			
21084	Stoppers, H=100mm, 1 Set = 2 pcs		>	H22 13 10 7A
	Colors and approvals			
12465	Colours for MB- approval: Typ "F" in RAL 7015, Slate Grey		>	H22 13 10 7A
12172	Colours for MB- approval: Typ "S" in RAL 7015, Slate Grey		>	H22 13 10 7A
12420	Extra charge for spray-galvanized platforms SHL		>	H22 13 10 7A
	Lift specific accessories and options			
	Accessories			
S1917	1 set Support strike plate for platforms for Headlight adjustment places cpl. For on floor and recessed Version without flush floor device (german law)			
12942	1 set LED Illumination, 3 pcs per platform			
21080	1 pcs Power distribution for one platform (Schuko plug 230 V / 16 A / IP54)		>	H41 01 08 1P
21096	1 pcs Pneumatic installation BL 4.55 Combi F 550 for one platform, 1 piece each in front and rear		>	H41 01 08 1P
11103	1 pcs Documentholder "AUTOPSTENHOJ"		>	H41 01 08 1P
11104	1 set magnetic tool tray set, 1 set = 2 pcs		>	H41 01 08 1P
11027	4 pcs of lifting pads Ø120/95/135, 1 set = 4 pcs			
11127	1 set Lifting pad extension 65mm suitable for all surface and inground lifts, 1 set = 4 pcs			
11107	1 set Lifting pad extension 100 mm suitable for all surface and inground lifts, 1 set = 4 pcs			
11017	1 set lifting pads for Mercedes "G- Class", 1 set = 4 pcs			
11040	Set of lifting pad "spike" for Sprinter 1 Set = 2 pieces			
11040	Set of lifting pads "prism" for Sprinter 1 Set = 2 pieces			
11108	1 set Safetyratch to mount on arm and chassis of vehicle as anti-tipping device, 1 set = 2 pcs			
12374	1 pcs Control column for ML, PL, BL, QL			

All rights reserved. © AUTOPSTENHOJ 2023
Alle Rechte vorbehalten. © AUTOPSTENHOJ 2023

Illustrations are not binding and optional. Under reserve of dimensional, constructional and technical modifications! Validity 02/2023.

Sharklift 4.65 F 550

Electro-hydraulic 4-ram lift, 6.5 t capacity, platforms

AUTOPSTENHOJ GmbH
Tel. +49 5971 8602-02 (DE)
Tel +45 76821-330 (DK)
Mail: info@autopstenhoj.com
Web: www.autopstenhoj.com

UPLIFTING COMPANY
AUTOP STENHOJ

OEM approved Article List | Mercedes-Benz
01 February 2022

OEM Nr.
01|2023.01.01
↓Edition↓

Items marked with this > arrow are to be ordered, if you want standard version >

Our general terms of sales and delivery apply.

	SHARKLIFT 4.65 F 480 / 550			OEM Nr.
Item no.	Description (EN)	DC	>	
	Superstructure Platform			
21072	Platform superstructure 4.65 F 550 - KA1550/3000		>	H41 01 08 1P
	Hydraulic unit			
10293	Hydraulic unit SHL 4.65, Zyl. Ø 213, stroke 1865 mm, KA 1550 / KA 3000 mm, on-floor / recessed without flush floor device		>	H41 01 08 1P
11073	Electrical connection cables JE SHL/Tele for JE DT-SPS Ctrl. ML Tele 2.35 / SHL 4.55 / SHL 4.65			
	Oil			
12041	Oil filling, 24 ltr.			
12042	Ecological hydraulic fluid, 24 ltr.		>	H41 01 08 1P
	Cassettes			
12310	Set of cassettes SHL 4.65			
12311	Set of cassettes SHL 4.65, hot galvanized			
11096	Pre assembly in the factory			
12975	Cassette mounting support for 4-ram lift SHL KA 1550/3000			
	Drive-on ramps - Stoppers			
21077	Short drive-on ramps, 925mm SHL 4.65 (1 set = 2 pcs) for on-floor installation			
21073	Long drive-on ramps 1200 mm (1 Set = 2 pcs) 4.65, for on-floor installation			
21095	Long drive-on ramps 1400 mm, 8° (1 Set = 2 pcs) 4.65, for on-floor installation		>	H41 01 08 1P
21116	Fixed stoppers SHL 4.55 / 4.65, 1 Set = 2 pcs for on-floor and recessed installation,		>	H41 01 08 1P
	Colors and approvals			
12465	Colours for MB- approval: Typ "F" in RAL 7015, Slate Grey		>	H41 01 08 1P
12468	Colours for MB- approval: Typ "jacking beam" in RAL 7015, Slate Grey		>	H41 01 08 1P
12420	Extra charge for spray-galvanized platforms SHL		>	H41 01 08 1P
	Lift specific accessories and options			
	Accessories			
12975	1 set Installation aid for cassettes for 4-ram inground lift, SHL KA 1550/3000			
12942	1 set LED Illumination, 3 pcs per platform			
21080	1 pcs Power distribution for one platform (Schuko plug 230 V / 16 A / IP54)		>	H41 01 08 1P
21081	1 pcs Pneumatic installation SHL 4.65 for one platform, 1 piece each in front and rear		>	H41 01 08 1P
11103	1 pcs Documentholder "AUTOPSTENHOJ"		>	H41 01 08 1P
11104	1 set magnetic tool tray set, 1 set = 2 pcs		>	H41 01 08 1P
20549	2 set Sliding plates autop-Premium (1 set = 2 pcs) according to MB-specification, ±30mm, ±3,5°		>	H41 01 08 1P
21093	1 pcs Jacking beam A air hydr. 4t, incl. innovative air supply, incl. Sidewalls for BL 2.55 F 550		>	H41 01 08 1P
12925	1 set Lifting pad adapter for jacking beam "A", (1 Set = 2 pieces)		>	H41 01 08 1P
11027	4 pcs of lifting pads Ø120/95/135, 1 set = 4 pcs		>	H41 01 08 1P
21076	1 set MKS console cpl., rotatable, 1 set = 4 pieces		>	H41 01 08 1P

All rights reserved. © AUTOPSTENHOJ 2023
Alle Rechte vorbehalten. © AUTOPSTENHOJ 2023

UPLIFTING COMPANY
AUTOP STENHOJ

Notes

Illustrations are not binding and optional. Under reserve of dimensional, constructional and technical modifications! Validity 02/2023.

Maestro 2.35 NxT

Electro-mechanical 2-post lift, 3.5 t capacity

AUTOPSTENHOJ GmbH
Tel. +49 5971 8602-02 (DE)
Tel +45 76821-330 (DK)
Mail: info@autopstenhoj.com
Web: www.autopstenhoj.com

UPLIFTING COMPANY
AUTOP STENHOJ

Januar 1st 2023

OEM Nr.
01|2023.01.01
↓Edition↓

Items marked with this > arrow are to be ordered, if you want standard version >

Our general terms of sales and delivery apply.

Maestro 2.35 NxT			OEM Nr.
Item no.	**Description (EN)**		
	Maestro 2.35 NxT F, arms DT 555-1100 mm / ST 925-1550 mm		
098439	Maestro 2.35 NxT F ST/DT 400/3/50 - 4350 mm Mercedes-Benz	>	098439
	Standard supplied including following items:		
	Colours for MB- approval: Column, Carriage & Arms in RAL 7015, Slate Grey		
777958	1 pcs Portal set (4060) Maestro 2.35 NxT (H:1675mm)		
3000242	4 pcs lifting pads Ø120/95/135		
777449	1 set, 14 pcs expansion bolts for Maestro 2.35 NxT F - 165 mm		
11104	1 set magnetic tool tray set, 1 set = 2 pcs		
11103	1 pcs Documentholder "AUTOPSTENHOJ"		
	Accessories and options		
	Accessories		
758939	LED Lighting Kit - for 2-post lifts		
777904	Extra control box complete for 2nd column		
777907	Power pack for Maestro, 1 x Schuko plug (230 V), 1 x compressed air quick coupling 1/4", only for Master control unit		
29265	Set of lifting pads Ø120/70/95, 1 set = 4 pieces		
11127	Lifting pad extension 65mm suitable for all surface and inground lifts, 1 Set = 4 pieces		
11107	Lifting pad extension 100mm suitable with all inground- and surface mounted lifts, 1 Set = 4 pieces		
11043	Set of lifting pads with prisma "Sprinter", 1 Set = 2 pieces		
11040	Set of lifting pads with pin "Sprinter", 1 Set = 2 pieces		
11017	Set of lifting pads for Mercedes G-Class, 1 Set = 4 pieces		
11108	Safetyratch to mount on arm and chassis of vehicle as anti-tipping device, 1 Set = 2 pieces		
11105	Drive on assist Rubber HxWxL = 50x500x1000mm, 1 Set = 2 pieces		

All rights reserved. © AUTOPSTENHOJ 2023
Alle Rechte vorbehalten. © AUTOPSTENHOJ 2023

UPLIFTING COMPANY
AUTOP STENHOJ

Maestro 2.65 F

Electro-mechanical 2-post lift, 6.5 t capacity

AUTOPSTENHOJ GmbH
Tel. +49 5971 8602-02 (DE)
Tel +45 76821-330 (DK)
Mail: info@autopstenhoj.com
Web: www.autopstenhoj.com

UPLIFTING COMPANY
AUTOP STENHOJ

Januar 1st 2023

OEM Nr.
01|2023.01.01
↓Edition↓

Items marked with this > arrow are to be ordered, if you want standard version >

Our general terms of sales and delivery apply.

Maestro 2.65			OEM Nr.
Item no.	**Description (EN)**		
	Maestro 2.65 F, arms TT 770-1640mm / TT 770-1640 mm		
098206	Maestro 2.65 F, 400/3/50, Mercedes- Benz	>	H 21 01 06 1L
	Standard supplied including following items:		
	Colours for MB- approval: Column, Carriage & Arms in RAL 7015, Slate Grey		
777414	1 pcs Portal set (4910-5270) Maestro 2.65 F		
3000242	4 pcs lifting pads Ø120/95/135		
777255	1 set, 18 pcs expansion bolts for Maestro 2.65 F - 170 mm		
11104	1 set magnetic tool tray set, 1 set = 2 pcs		
11103	1 pcs Documentholder "AUTOPSTENHOJ"		
	Accessories and options		
	Accessories		
758939	LED Lighting Kit - for 2-post lifts		
777904	Extra control box complete for 2nd column		
777907	Power pack for Maestro, 1 x Schuko plug (230 V), 1 x compressed air quick coupling 1/4", only for Master control unit		
11127	Lifting pad extension 65mm suitable for all surface and inground lifts, 1 Set = 4 pieces		
11107	Lifting pad extension 100mm suitable with all inground- and surface mounted lifts, 1 Set = 4 pieces		
11043	Set of lifting pads with prisma "Sprinter", 1 Set = 2 pieces		
11040	Set of lifting pads with pin "Sprinter", 1 Set = 2 pieces		
11017	Set of lifting pads for Mercedes G-Class, 1 Set = 4 pieces		
11108	Safetyratch to mount on arm and chassis of vehicle as anti-tipping device, 1 Set = 2 pieces		
11105	Drive on assist Rubber HxWxL = 50x500x1000mm, 1 Set = 2 pieces		

All rights reserved. © AUTOPSTENHOJ 2023
Alle Rechte vorbehalten. © AUTOPSTENHOJ 2023

Illustrations are not binding and optional. Under reserve of dimensional, constructional and technical modifications! Validity 02/2023.

Accessories

AUTOPSTENHOJ GmbH
Tel. +49 5971 8602-02 (DE)
Tel +45 76821-330 (DK)
Mail: info@autopstenhoj.com
Web: www.autopstenhoj.com

UPLIFTING COMPANY AUTOP STENHOJ

OEM approved Article List | Mercedes-Benz
01 February 2022

OEM Nr.
01|2023.01.01
↓Edition↓

Items marked with this > arrow are to be ordered, if you want standard version >

Our general terms of sales and delivery apply.

Accessories

Item no.	Description (EN)	DC	>	OEM Nr.
11005	Rubber plates 20 mm hight, 1 set = 4 pcs			
11102	Rubber blocks 40mm, 120x120xØ100, 1 set = 4 pcs			
11001	Rubber blocs 60 mm, 1 set = 4 pieces			
11000	Rubber blocs 80 mm, 1 set = 4 pieces			
11004	rubber blocks 100 mm high, 1 set = 4 pcs			
11100	wall mounted support slot for 4 pcs rubber blocs for 11001, 11000, 11004			
11156	Distance ring wheel support			
12410	Rubber bloc support for on floor platforms (1 set = 4 pcs) for 11001, 11000, 11004			
14017	U- lifting pad adapter for a standard lifting pad 1 Set = 4 Pieces			
16004	U- lifting pad adapter for a standard lifting pad 1 Piece			
S1940	Special VW Lifting Pad Commercial vehicles (ID BUZZ)			
S1943	Special VW Lifting Pad PKW (ID3 / ID4)			
11031	Freestanding lifting pad Ø 120/135/195 height adjustable, 1 piece Adjustable height from floor to top edge of lifting pad: min 135 mm / max 195 mm			
29265	Lifting pad Ø 120/70/95 height adjustable, 1 piece Adjustable height from floor to top edge of lifting pad: min 70mm / max 95 mm			
11027	Lifting pad Ø 120/95/135 height adjustable, 1 piece Adjustable height from floor to top edge of lifting pad: min 95 mm / max 135 mm			
11028	Lifting pad Ø 120/135/195 height adjustable, 1 piece Adjustable height from floor to top edge of lifting pad: min 135 mm / max 195 mm			
11029	Lifting pad Ø 120/195/300 height adjustable, 1 piece Adjustable height from floor to top edge of lifting pad: min 195 mm / max 300 mm			
11030	Lifting pad Ø 120/280/420 height adjustable, 1 piece Adjustable height from floor to top edge of lifting pad: min 280 mm / max 420 mm			
11043	Set of lifting pads "Crafter/Sprinter" 1 Set = 2 pieces			
11040	Set of lifting pads Crafter/Sprinter 1 Set = 2 pieces			
11013	Lifting pads "Rover", 1 set = 4 pcs. for item 208501 set = 4 pieces			
11014	Set of lifting pads "Rover" for jacking beam AF 20 / 1 Set = 2 pieces			
11047	Lifting pad Ø 120/95/135 height adjustable, 1 piece (for ML 2.35 Saa 135/230)			
11048	Lifting pad Ø 105, adjustable 80-120mm from floor to top edge of lifting pad (Porsche) 1 piece			
11033	Screw pad Ø 120 height adjustable, 1 piece Adjustable height from floor to top edge of lifting pad: min 118 mm / max 178 mm			
11017	Lifting pads Mercedes "G-model", 1 set = 4 pcs			
11127	Lifting pad extension 65mm suitable for all surface and inground lifts			
11107	Lifting pad extension 100 mm (1 Set = 4 pieces) suitable for surface mounted and all inground lifts			
23839	Aluminium lifting traverse for repair platforms KA 1335 or KA 1550, especially for lifting 4x4 vehicles, distance lifting points min. 500mm - max. 1200mm, without lifting pads, max. 1750 kg capacity, 1 set = 2 pcs, min. height = 175 mm, for uns of lifting pads no. 29265			
20772	Wheel support device "Offroad" (500 mm) 1 set = 4 pcs, capacity per item max. 875 kg (only for inground lifts and the following surface mounted lifts Maestro 35 M/H Premium, Maestro 2.35 F Sport, Maestro 2.35 F Premium. Wheel lift can only be combined with the F version of the lifts.			
20985	Wheel support device "Standard" (400 mm) 1 set = 4 pieces, capacity per item max. 875 kg (only for inground lifts and the following surface mounted lifts Maestro 35 M/H Premium, Maestro 2.35 F Sport, Maestro 2,35 F Premium. Wheel support can only be combined with the F version of the lifts.			
20723	Surface mounted Lift set of 4 wheel support device (500 mm) - for Maestro 2.50 / 2.55. Max cap of 875 kg per fork			
11108	Webbing load restraint assembly as tilt safety device, L=4m, 1 set = 2 pcs			
11105	Rubber drive-on support HxWxL = 50x500x1000mm			
11080	Extra charge for 1 set = 4 pcs. XY heads with fixation of cross slider			
12228	Separating box for SL / E-ML external dimension 950x950x1500 mm			
12204	Separating box for KA 1350, external dimension 1950x950x1500 mm			
S0759	Separating box for ML Combi KA 1335/1705, BL/SHL KA1550, external dimension 2350x950x1500 mm			
S0671	Separating box for KA 2300, external dimension 2900x950x1500 mm			
12230	Separating box for ML 2600, BL KA 2650, external dimension 3400x950x1500 mm			
12374	Control column for ML, PL and BL elegant stand solumn with sorage trays, prepared for installation of an existing control unit of a lift upon the column, ncl. 4 storage traxs for existing rubber blocks / accessories. Measurements (without control unit) LxWxH: 275 x 275 x 1121 mm, Colour RAL 7016			
59266	light barrier for height limitation			

All rights reserved. © AUTOPSTENHOJ 2023
Alle Rechte vorbehalten. © AUTOPSTENHOJ 2023

Jet Cleaner RC 82/122

Parts cleaning machines

AUTOPSTENHOJ GmbH
Tel. +49 5971 8602-02 (DE)
Tel +45 76821-330 (DK)
Mail: info@autopstenhoj.com
Web: www.autopstenhoj.com

UPLIFTING COMPANY AUTOP STENHOJ

OEM approved Article List | Mercedes-Benz
01 February 2022

OEM Nr.
01|2023.01.01
↓Edition↓

Items marked with this > arrow are to be ordered, if you want standard version >

Our general terms of sales and delivery apply.

Jet Cleaner RC 82 & RC 122

Item no.	Description (EN)	DC	>	OEM Nr.
	Jet Cleaner			
10541	Jet Cleaner RC 82, painted			
10539	Jet Cleaner RC 82, blasted			
10542	Jet Cleaner RC 122, painted			
10538	Jet Cleaner RC 122, blasted			
	Accessories included in the price			
	Made of stainless steel			
	Cover of detergent liquid			
	Gages			
	Painting in 2 colours (RAL 7016 grey and RAL 3020 red)only for article no. 10541 and 10542			
	Painting in 1 colour (RAL 7016 grey or RAL 3020 red)only for article no. 10541 and 10542			
	Colors			
12455	AUTOPSTENHOJ painting - grey RAL 7016 - red RAL 3020			
12506	Extra charge special colours, RC 82, max 2 colours			
12558	Extra charge special colours, RC 122, max 2 colours			
	Accessories and options			
	Accessories			
12500	Automatic timer for RC 82			
12504	Automatic timer for RC122			
12507	Oil skimmer for RC82			
12505	Oil skimmer for RC122			
12508	Economy-isolation for RC 82			
	Baskets			
12625	Baskets for small parts 400x200x170 mm, MW 6mm for RC 82			
	Baskets for small parts 400x200x170 mm, MW 6mm for RC122			
12710	Detergent 12 in canister à 20kg for RC 82			
12708	Anti-foaming agent 50 liquid (price per liter) for RC 82			
12708	Anti-foaming agent 50 liquid (price per liter) for RC122			

All rights reserved. © AUTOPSTENHOJ 2023
Alle Rechte vorbehalten. © AUTOPSTENHOJ 2023

Illustrations are not binding and optional. Under reserve of dimensional, constructional and technical modifications! Validity 02/2023.

Testmaster RT40

Roller brake tester according to Mercedes-Benz criteria catalogue

Scan the QR-Code
for detailed product information.

Further Information on
www.autopstenhoj.com

Manufacturer's certificate
can be provided on request

Technical data		
Drive-over load	RT40	4,000 kg
Test speed		5 km/h
Drive power of motors	RT40	2 x 4 kW
Roller diameter		205 mm
Test width	RT40	800 – 2,200 mm
Test load	RT40	at 50 % braking 2.6 t
Fuse		3 x 20 A inert 4 kW motors
Power supply		3 x 400 V, N, PE 50 Hz
Brake force	RT40	6 kN
Dimensions, analogue display box (W x H x D)		810 x 670 x 70 mm
Dimensions, roller set (L x W x H)	RT40	2,320 x 680 x 240 mm (800 - 2,200 mm)

Additional accessories at www.autopstenhoj.com

Application

- Check-in
- Repair and maintenance
- Testing
- General inspection

Description:

- Galvanized, enclosed roller set
- Wear resistant 205 mm rollers with welded profile surface
- Track width RT40: from 800 to 2,200 mm (optional 2,800 mm)
- Height adjustment screws
- Wear resistant and modern electronic strain gauge measuring system
- 50 mm sensor rollers
- Prepared for retrofitting of weighing device
- Modular system, all roller sets can be extended to test lanes
- Compact electric / switchbox, prepared for upgrade
- Drive-over axle load RT 40 4.0 to (optional 5 t)
- Brake force RT 40 6 kN
- Equipped as standard with drive-off system
- Manual / Automatic mode
- Delayed switch-on, start-up monitoring
- Test program for electronic parking brakes
- Lockable main switch
- Optionally with large easily read analogue display or with PC-connection kit and PC software

Version complies with the catalogue of criteria:

- Roller set with electric / switch box
- 2 x 4.0 kW motors
- Plastic coated rollers
- Software Display Basic
- PC-connection kit (without PC)
- Pedal force meter cable version
- Remote control type IPC
- Also available with analogue display

Optional extras:

- Electronically controlled drive-out aid for automatic vehicles
- Pneumatic lowering/ lifting device
- Raising kit
- Suspension tester
- Side slip tester
- Raising kit
- Suspension tester
- Side slip tester
- All-wheel manual & automatic
- Roller cover plates
- Remote control
- Digital display LED-D4
- Weighing device
- PC connection with ASA Live stream
- PC software Display Office
- Foundation frame
- Lost formwork
- Pit protection

Supplement for use of transporters:

- Reinforced roller set 5 to
- Roller set test width 800 - 2,800 mm

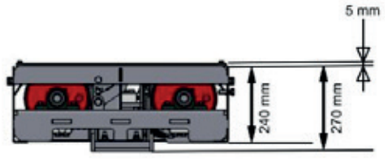

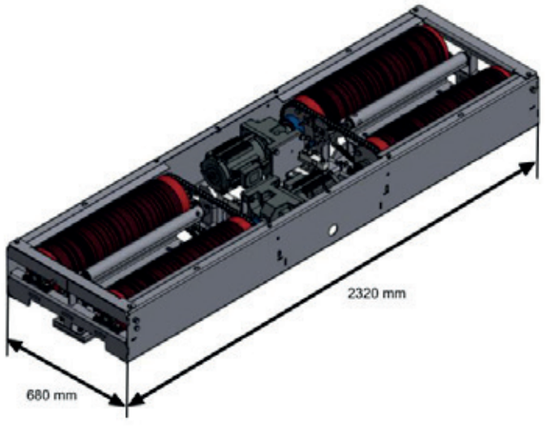

Manually reversible rotation and measuring device

Lowering and lifting device

Roller cover plate

Illustrations are not binding and optional. Under reserve of dimensional, constructional and technical modifications! Validity 05/2023.

Testmaster RT187-2

Roller brake tester according to Mercedes-Benz criteria catalogue

Scan the QR-Code
for detailed product information.

Further Information on
www.autopstenhoj.com

Manufacturer's certificate
can be provided on request

Technical data	
Drive-over load	18,000 kg
Brake force	40 kN
Testing speed	2.6 km/h
Motors	2 x 11 kW
Roller diameter	265 mm
Test width	1,150 mm
Test load	at 50% braking 16 t
Fuse	50 A inert
Power supply	3 x 400 V, N, PE 50 Hz
Dimensions, analogue display box (W x H x D)	810 x 670 x 70 mm
Dimensions, roller set (L x W x H)	1,390 x 1,145 x 554 mm

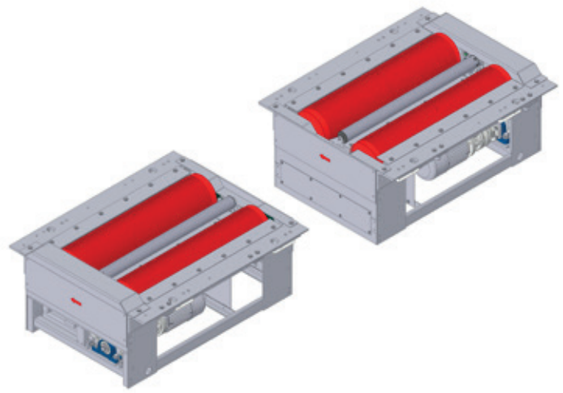

Application

- ☐ Check-in
- ☐ Repair and maintenance
- ☐ Testing
- ☐ General inspection

Optional extra: Digital display

Description:

- ☐ 2 galvanized roller sets (split version) for hanging installation (frame required for weighing device, also if retro-fitted)
- ☐ Motors with planetary gears, enormous brake power
- ☐ Wear resistant rollers
- ☐ Wear resistant and modern electronic strain gauge measuring system
- ☐ 80 mm rollers
- ☐ Prepared for retrofitting of weighing device
- ☐ Modular system, all roller sets can be fitted with options
- ☐ Compact electric / switchbox, prepared for upgrade
- ☐ Equipped as standard with drive-off system
- ☐ Manual / Automatic mode
- ☐ Delayed switch-on, start-up monitoring
- ☐ Lockable main switch
- ☐ Optionally with large easily read analogue display or with PC-connection kit and PC software

Version complies with the catalogue of criteria:

- ☐ Galvanized roller sets with electric / switch box
- ☐ 2 x 11.0 kW motors
- ☐ Plastic coated rollers
- ☐ PC-Software Display Testlane
- ☐ PC connection kit (without PC)
- ☐ Wireless remote control
- ☐ Rotation direction reversal & single wheel stop
- ☐ EDOS (Easy drive-out system)
- ☐ Weighing device
- ☐ Pressure converter basic version for PC
- ☐ Also availabe with analogue display

Optional extras:

- ☐ Simultaneous display
- ☐ Digital display LED-D4
- ☐ Pit protection for pit installation
- ☐ Roller set lifting for load simulation
- ☐ Variable stop function for roller set lifting
- ☐ Preparation for Semmler roller
- ☐ Preparation VDO Kinzel
- ☐ Radio pedal force meter
- ☐ 1500mm rollers for low loader
- ☐ Automatic all-wheel detection
- ☐ Roller prism cover
- ☐ Fast track plate
- ☐ Database software
- ☐ SP connection box
- ☐ ASA Livestream

Supplement for use of passenger cars:

- ☐ 2nd testing speed
- ☐ Pedal force meter for passenger cars

Analogue display with digital display LED - D4

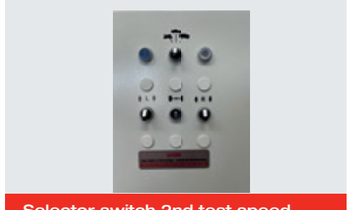

Selector switch 2nd test speed

Lifting device 150 or 220 mm

SP-connection

Roller prism cover

Testmaster RT40

Rollen Bremsenprüfstand nach Mercedes Benz Kriterien-Katalog

Testmaster RT40 MB

Roller brake tester according to Mercedes-Benz criteria catalogue

Application:
check-in, repair and maintenance, testing equipment, general inspection

Gerneral data		Dimension	
Max. axle load	4000 kg		
Test width min. / max.	800 - 2200 mm	Roller set (L x W x H)	2.320 x 680 x 240
Test Speed	5,0 km/h	E-Box (W x H x D)	380 x 380 x 220 mm
Drive motors	2x 4,0 kW	Analog display (W x H x D)	810 x 670 x 70 mm
Braking power	6 kN		
Roller diameter	205 mm		

item no.	Basic package	Display
1044000	**Testmaster RT40 MB (corresponds the requirement of the Daimler AG)**	Analogue
scope of delivery: roller set with electrical/ control box (1110040), drive motors 2x 4,0 kW (1750044), plastic coated roller surface (1710005), software display Basic (1380010), PC-connection kit USB (1480100)(no pc included), analogue display (1210001a), swivel bracket (1980005), wall bracket (1980010), pedal force meter cable version (1880004) and remote control type-I (1280005)		
1044005	**Testmaster RT40PC MB (corresponds the requirement of the Daimler AG)**	PC software
scope of delivery: roller set with electrical/ control box (1110040), drive motors 2x 4,0 kW (1750044), plastic coated roller surface (1710005), software display Basic (1380010), PC-connection kit USB (1480100)(no pc included), pedal force meter cable version (1880004) and remote control type-IPC (1280006)		

item no.	Required for vehicle inspection in Germany per directive 10/2011 in accordance with StVZO
1410005	**Chain wheel sensor (required for MOT)**
required for vehicle inspection stations (not in all countries)	

item no.	Software and PC-connection interfaces (required in Germany for asa live stream)
1380015	**Upgrade software Display Basic**
Upgrade release for software display basic to display Testlane	
1380030	**Software Display-Office**
Data-Bank for software display basic and Testlane, for customers and vehicle data, visual faults, storage of measured data, recall of data and printout, network module for PC Link Up, operates with min. Windows 10. Only in conjunction with software display basic or Testlane.	
1380035	**Graphic program for software Display Office (only for Car brake tester)**
Graphical display of measured values. Brake Forces per axle left and right, - with option Pedal force Transducer, then the graphic of this test is displayed. - with option „Weighing Unit“. Additional graphic is displayed of Brake Force Retardation in relation to test weight. Only in conjunction with software display office	
1890005	**PC console**
PC trolley basalt / basalt / anthracite with 1 adjustable shelf (storage area 425x405mm (WxD)); coated table top with ABS protective edge; 4 swivel castors 125mm, 2 with stoppers; Color combination: basalt gray (similar to RAL7012); Roller blind in anthracite (similar to RAL7016); Standard color of side walls: basalt gray (similar to RAL7012). Dimension: Hight: 1065.0000 mm; Width: 650.0000 mm; Deep: 750.0000 mm	

item no.	Remote control
1280007	**Remote control type-R**
for analogue display, includes a radio receiver (20 x codable), guidance control, transmit approx. 50m. Additionally operates the roller set raising and roller lowering/lifting device.	
1280008	**Remote control type-RPC**
for PC-System, includes a radio receiver (20 x codable), transmit approx. 50m. Additionally operates the roller set raising and roller lowering/lifting device.	

Testmaster RT40

Rollen Bremsenprüfstand nach Mercedes Benz Kriterien-Katalog

Testmaster RT40 MB

Roller brake tester according to Mercedes-Benz criteria catalogue

Application:
check-in, repair and maintenance, testing equipment, general inspection

item no.	Accessories for roller set
1440005	**Drive-off aid for vehicles with automatic transmission**
Electronic regulated drive-off aid "EDOS" (patented) incl. rotation and measurement direction reversal (manual 4WD) for vehicles with automatic transmission	
1480010	**Automatic all wheel recognition and regulation (Patent EP 1 931 957 B1)**
vollautomatischen Überprüfung der Allradverbindung und Steuerung vom kompletten Prüfablauf, keine Fernbedienung nötig (nur in Verbindung mit Dreh- Messrichtungsumkehr 1440005)	
1480020	**Soft starting contactors for roller set with one direction**
2 contactors for roller set RT30-RT60, surcharge	
1480025	**Soft starting contactors for roller set with reverse directional control**
4 contactors for roller set RT30-RT60 with rotation and measuring direction reversal, surcharge	
1280100	**Weighing device for roller set RT40**
static and dynamic, 4 shear force transducers. (not in conjunction with roller set raising) With the use of digital displays LED-D4 the weights are constantly displayed, no remote control is required. With optional remote control the measured values of the respective axle number and the operating mode are assigned and then displayed in reverse again, and printed out via the PC	
1250040	**Pneumatic lowering threshold for roller set RT40**
Pneumatic lowering device as safety tread threshold with weight recognition, traversable with 4,0 to axle load (not for RT40 with option RS50)	
1250041	**Pneumatic lowering/ lifting threshold for roller set RT40**
Pneumatic lowering/ lifting threshold as lift-out device; lifting force 2,2to; traversable with 4,0 to axle load; only in conjunction with remote control type-R/ -RPC (not for RT40 with option RS50)	
1280040	**Roller cover RT40, pluggable**
hot-dip galvanized steel sheet, only for Testmaster RT40	
1280041	**Roller cover RT40, outward folding, ex works**
hot-dip galvanized steel sheet, only for Testmaster RT40	
1280042	**Roller cover RT40, inward folding, ex works**
hot-dip galvanized steel sheet, only for Testmaster RT40	
1280060	**Roller cover RT60, pluggable**
hot-dip galvanized steel sheet, only for Testmaster RT60 (also for RS50)	
1280061	**Roller cover RT60, outward folding, ex works**
hot-dip galvanized steel sheet, only for Testmaster RT60 (also for RS50)	
1280062	**Roller cover RT60, 4x folding**
hot-dip galvanized steel sheet, only for Testmaster RT60 (also for RS50); 2x 700mm inward folding, 2x 300mm outward folding	

item no.	Pedal force meter
1440010	**Reinforced roller set 5to**
traversable axle load 5t only for roller set RT40	
1710050	**Roller-Set RS50**
Surcharge for roller set RT40, track width min. 800 and max. 2800 mm (dimension and foundation plan, look at Testmaster RT60; options for roller set RS50 see price list Testmaster RT60)	
1710006	**Plastic-coated roller surface**
roller plastic coated for roller set RS50 / RT60, surcharge	

Illustrations are not binding and optional. Under reserve of dimensional, constructional and technical modifications! Validity 02/2023.

Testmaster RT40

Rollenbremsenprüfstand nach Mercedes Benz Kriterien-Katalog

Testmaster RT40 MB

Roller brake tester according to Mercedes-Benz criteria catalogue

Application:
check-in, repair and maintenance, testing equipment, general inspection

1280105 Weighing device for roller set RT60 and RT40 with RS50

static and dynamic, 4 shear force transducers. (not in conjunction with roller set raising) With the use of digital displays LED-D4 the weights are constantly displayed, no remote control is required. With optional remote control the measured values of the respective axle number and the operating mode are assigned and then displayed in reverse again, and printed out via the PC

item no.	Pedal force meter

1710040 Divided roller set RT40

Surcharge for divided roller set RT40

1710060 Divided roller set RT60 (surcharge)

Surcharge for divided roller set RT60 and roller set RT40 with option RS50

1278019 Pit protection type AL-2a width up to 1,00m pit

Pit protection "AL-2A", up to pit width 1.00 m, 2 light barriers with control unit, range 25 m, (assembly according to time required)

1278105 Wall mounting on front side, AL-2A

mounting on front side, for one light barrier "AL-2A", mounting width 700 mm

1278101 Swivel arm for AL-2A

for one light barrier "AL-2A", mounting width 700 mm

item no.	Accessories for mounting

1910040 Foundation frame roller set RT40

Foundation frame hot-dip galvanized, only for roller set RT40

1910045 Permanent formwork roller set RT40 (30cm)

Galvanized steel sheet for roller set RT40, only for roller set without roller set raising

1910042 Permanent formwork roller set RT40 (37cm), devided version

Foundation frame hot-dip galvanized, only for roller set RT40. Split version for mounting next to a pit

1920040 Foundation frame for Testlane TL40

Foundation frame hot-dip galvanized, only for Testlane Testmaster TL40, combination with roller set RT40 and suspension tester

1920050 Permanent formwork for Testlane TL40 (37cm)

Galvanized steel sheet for Testlane Testmaster TL40, combination foundation for roller set RT40 with roller set raising and suspension tester

1920055 Foundation cover Testlane TL40

Cover for prepared foundation (only for suspension tester)

1920060 Foundation frame for Testlane TL60

Foundation frame hot-dip galvanized, only for Testlane Testmaster TL60 (and optional roller set RS50)

1920070 Permanent formwork for Testlane TL60 (37cm)

Galvanized steel sheet for Testlane Testmaster TL60, combination foundation for roller set RT60/ RS50 with and without roller set raising and suspension tester

1920065 Cover plates for foundation, on the side for suspension tester

Side cover plates next to Boge chassis testers, in combination with foundation frame or formwork for Testmaster TL60 or TL40 with option RS50

Testmaster RT187-2

Rollenbremsenprüfstand nach Mercedes Benz Kriterien-Katalog

Testmaster RT187-2

Roller brake tester according to Mercedes-Benz criteria catalogue

Application:
check-in, repair and maintenance, testing equipment, general inspection

Gerneral data		Dimension	
Max. axle load	18.000 kg	per roller set (L x W x H)	1.390 x 1.145 x 554 mm
Testable axle load at 50% braking	14.000 kg	E-Box (W x H x D) with one speed	500 x 700 x 250 mm
Test Speed	2,6 km/h	E-Box (W x H x D) with two speed	800 x 600 x 300 mm
Drive motors	2 x 11,0 kW	Analog display (W x H x D)	810 x 670 x 70 mm
Braking power	34 kN		
Roller diameter	268 mm		
Roller legnth	1150 mm		

item no.	Roller set
1074000	**Testmaster RT187-2 PC MB (corresponds the requirement of the Daimler AG)**

scope of delivery: roller set with electrical/ control box (1170187), drive motors 2x 11,0 kW (1279011), plastic coated roller surface (1771870), rotation and measurement direction reversal (manual 4WD / 1480000), Drive-off aid - EDSO (1480005), pc software display Testlane (1380020), pc-connection kit USB (1480100)(no pc included), remote control type-RPC (1280008), weighing cells for RT187-2 (1280120) and basic package pressure transducers for PC-version (1571000)

item no.	Required for vehicle inspection (MOT)

1410007 Chain wheel sensor (required for MOT)

required for vehicle inspection stations (not in all countries)

item no.	Software and PC-connection interfaces

1380030 Software Display-Office

Data-Bank for software display basic and Testlane, for customers and vehicle data, visual faults, storage of measured data, recall of data and printout, network module for PC Link Up, operates with min. Windows 10. Only in conjunction with software display basic or Testlane.

1380036 Graphical program for software Display Office (cars / trucks)

Graphical Program for Cars / Trucks displaying, Brake Force curve per axle left / right side. As well as axle comparison. With the option “pneumatical air pressure Transducers”, further graphical display is possible. With the option „Pedal Force Transducer “, further graphical display is possible. With the option „Weighing-unit“ further graphical display is possible. Axle and EU Truck/ Trailer matching. Only in conjunction with software Display Office

1370006 Data interface ASA / EBV Austria

Interface EBV / ASA-network for data transmission to dealership software and EBV program (Austria). It is a remote control required and only in conjunction with software Display Office!

1380040 Calculation program truck

Calculation program based on vehicle weight or one / two point calculation extrapolation (truck). Only in conjunction with software display office and Graphic program for office.

1890005 PC console

PC trolley basalt / basalt / anthracite with 1 adjustable shelf (storage area 425x405mm (WxD)); coated table top with ABS protective edge; 4 swivel castors 125mm, 2 with stoppers; Color combination: basalt gray (similar to RAL7012); Roller blind in anthracite (similar to RAL7016); Standard color of side walls: basalt gray (similar to RAL7012). Dimension: Hight: 1065.0000 mm; Width: 650.0000 mm; Deep: 750.0000 mm

Illustrations are not binding and optional. Under reserve of dimensional, constructional and technical modifications! Validity 02/2023.

Testmaster RT187-2

Rollenbremsenprüfstand nach Mercedes Benz Kriterien-Katalog

Testmaster RT187-2

Roller brake tester according to Mercedes-Benz criteria catalogue

Application:
check-in, repair and maintenance, testing equipment, general inspection

item no.	Displays (analogue and digital)
1275000	**Analogue display for commercial vehicle roller set** Large and easy to read analogue display. Displaying 2 brake force readings 0-6 / 0-40 kN (electronically switch over of the test ranges). Signal lights for range display and wheel slip. 20m pre cable for the connection to the E-Box. Additional displays can be integrated acting as a parallel display.Colour of display cabinet is basalt grey, dial gauge is white.
1210005a	**LED display LED D-4 (RGB)** LED display LED D-4 (RGB) with a resolution of 8x64 LEDs for all roller brake test stands and test lanes, as individual or group display; Variable, dynamic display format (e.g. 3x pressure sensor or brake values + difference + status) Digital display with several display areas for brake, shock absorber, difference, track, weight and pressure values - Measured value display 0-99.99 - Housing dimensions 705x125x42, digit size 75mm - Weight approx. 2 kg
item no.	**Display accessories (analogue and digital)**
1480029	**Difference display LED (2 digit)** LED with two digits, range 0-99% for transparent analogue display car and truck (not for analogue display 1220001)
1480035	**Block indicator** LED light for block indication
1980005	**Swivel bracket for analogue display** Swivel bracket with star grip screws (not in conjunction with digital display LED - D3)
1980030	**Swivel bracket for digital display LED - D4** Swivel bracket with star grip screws
1980010	**Wall bracket** for all analogue and digital display LED - D4
1980020	**Yoke for digital display LED** with plug sleeves system, to build multiple digital displays LED - D4 above the other
1980022	**Plug-in sleeves (short)** for digital display LED - D4 (multiple ads superimposed pluggable) price per 2 pieces for an display
1980025	**Yoke with long plug-in sleeves** to combine analogue display with digital display LED - D4 on the top
item no.	**Accessories for roller set**
1470001	**2 Test speeds 2,6 and 5,2 km/h for Testmaster RT100 up to RT187-2** Rotary selector switch for Motorbike / Car and Commercial vehicle pre selection. Note: A mains current breaker switch set min. to 0,3 A is required. (Inverter is included).
1480010	**Automatic all wheel recognition and regulation (Patent EP 1 931 957 B1)** with automatic reverse roller and measuring direction and automatic test sequence, no remote control needed. Patent application „Automatic all wheel recognition and regulation" - (only in conjunction with item no. 1480000)
1471100	**Automatic disengagement of rigid 4x4 drive (one speed drive motors)** Automatic disengagement of rigid 4x4 drive train e.g. (Truck twin axle). Through speed controlled revolutions of the rollers. Includes frequency Inverter Patent application: „Automatic all wheel recognition and regulation" (DE 102005047970.7 und PCT/EP2006/009490) only in combination with item no. 1480010
1471105	**Automatic disengagement of rigid 4x4 drive (two speed drive motors)** Automatic disengagement of rigid 4x4 drive train e.g. (Truck twin axle) including second test speed. Through speed controlled rotating rollers. Includes frequency Inverter Patent application: „Automatic all wheel recognition and regulation" (DE 102005047970.7 und PCT/EP2006/009490) only in combination with item no. 1480010

Testmaster RT187-2

Rollenbremsenprüfstand nach Mercedes Benz Kriterien-Katalog

Testmaster RT187-2

Roller brake tester according to Mercedes-Benz criteria catalogue

Application:
check-in, repair and maintenance, testing equipment, general inspection

1278000	**VDO-Kienzle- Sensor holder** already pre installed in the roller set. 1 pce.
1878025	**Preparation for Semmler role** for Testmaster RT 187-2
1279015	**Drive motor upgrade 15kW , surcharge** for more brake force, test speed t 2,6 km/ h, axle load at deceleration 50% 18 t, max braking force = 44 kN (only for Testmaster RT180-2 and RT187-2)
1479900	**Drive motors electro-mechanically braked** surcharge, (2 units) for Testmaster RT130-2 until RT187-2
1771518	**Roller 1500mm Testmaster RT187-2** surcharge, low loader version, roller length 1500mm
1879905	**Tractor specification Testmaster RT187-2** surcharge, enlarged roller center distance to 490 mm, both rollers elevated by 40 mm. Testable wheel sizes from 13 – 48 inch. Attention! With cars with low ground clearance there is a risk of underside collision
1710009	**Plastic-coated roller surface** roller plastic coated for roller set RT187-2, surcharge
1771815	**Plastic-coated roller surface** only for Testmaster RT187-2 with roller length 1500mm, surcharge
1879001	**Lifting device for roller set Testmaster RT187 -2** Lift approx. 150mm, lifting capacity 12 t axle load. The dimensions of the foundation and foundation frame are identical with or without roller lifting. The roller lifting is carried out within the test stand frame. Each roller set has an integrated hydraulic unit, 4 lifting cylinders and hydraulic lines (only for Testmaster RT187-2).
1879101	**Lifting device for roller set Testmaster RT187 -2** Lift approx. 220mm, lifting capacity 12 t axle load. The dimensions of the foundation and foundation frame are identical with or without roller lifting. The roller lifting is carried out within the test stand frame. Each roller set has an integrated hydraulic unit, 4 lifting cylinders and hydraulic lines (only for Testmaster RT187-2).
1879003	**Variable stop function for hydraulic roller lift (ex factory)** Stepless lifting and lowering of the roller set from "zero position" to "end position" (maximum stroke). Operation with switch on the electrical / control box, or with additionally remote control type R / RPC. (Only in conjunction with 1879000/ 1879001/ 1879100/ 1879101)
item no.	**Pedal force meter**
1880006	**Pedal force meter radio version PKM1K** Pedal force meter with velcro and 2 m cable to radio transducer (fixed), only in conjunction with radio receiver FE9K. With LED light for indication of charge status and connection to radio receiver. To display the values, PC software or digital display LED-D4 is required.
1880050	**Radio receiver FE9K for radio pressure sensors** necessary when using radio sensors
1880095	**Charging box X5** box for five radio pressure sensors
item no.	**Accessories Cover**
1272025	**Roller prism cover Testmaster RT187-2** Roller prism cover galvanised, pluggable, for Testmaster RT187-2 (set of 4 á 28 Kg)

Illustrations are not binding and optional. Under reserve of dimensional, constructional and technical modifications! Validity 02/2023.

Testmaster RT187-2

Rollenbremsenprüfstand nach Mercedes Benz Kriterien-Katalog

Testmaster RT187-2

Roller brake tester according to Mercedes-Benz criteria catalogue

Application:
check-in, repair and maintenance, testing equipment, general inspection

item no.	Accessories for mounting
1272035	**Center cover plate for Testmaster RT187-2, max. 200kg** Center cover plate, for installation in a non working pit area, max load 200kg only for Testmaster RT187-2
1272045	**Center cover plate for Testmaster RT187-2, max. 9t** for installation in a non working pit area, max load 9t only for Testmaster RT187-2
1972132	**Foundation frame, split type, Testmaster RT187-2 (2 pieces)** hot-dip galvanized, prepared for weighing cells (directly or later; if ordered without weighing device, you have to use the weighing dummy item no. 1279000 to install the brake tester)
1971875	**Foundation frame, split type, Testmaster RT187-2 with roller length 1500mm** Foundation frame split for Testmaster RT187-2 with roller length 1500mm (low-loader version) hot-dip galvanised, prepared for weighing device (if ordered without weighing device, you have to use the weighing dummy item no. 1279000 to install the brake tester)
1972133	**Connection parts for foundation frame split type Testmaster RT187-2** As a closed frame when installed in front or without a pit. Track min. 0,8m

Notes

Illustrations are not binding and optional. Under reserve of dimensional, constructional and technical modifications! Validity 02/2023.

Notes

Illustrations are not binding and optional. Under reserve of dimensional, constructional and technical modifications! Validity 02/2023.

Mercedes-Benz
Partner-Shop

AUTOPSTENHOJ GmbH
Sandkampstr. 90 | DE-48432 Rheine
+49 5971 8602-02
info@autopstenhoj.com

AUTOPSTENHOJ GmbH
Barrit Langgade 188-190 | DK-7150 Barrit
+45 76 82 13 30
info@autopstenhoj.com